STATE	PROJECT	SHEET NUMBER

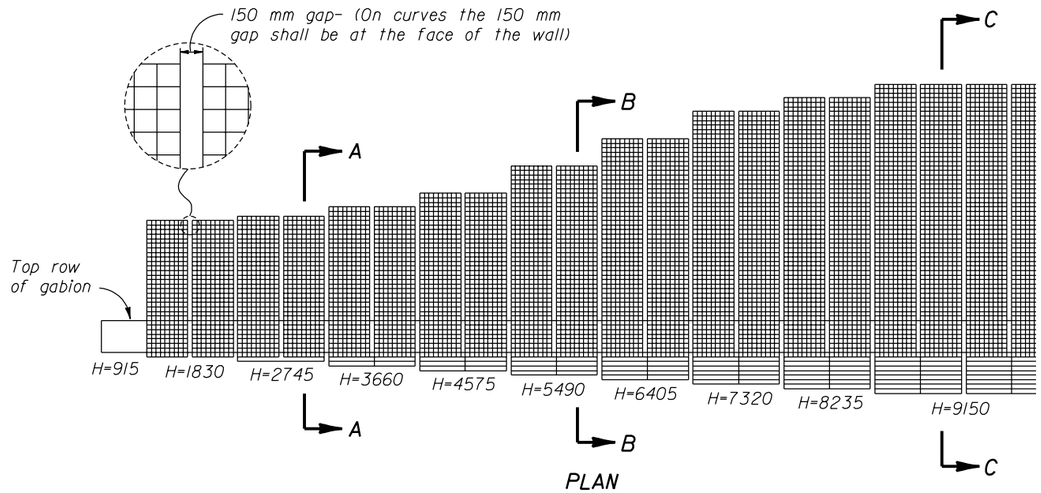

PLAN

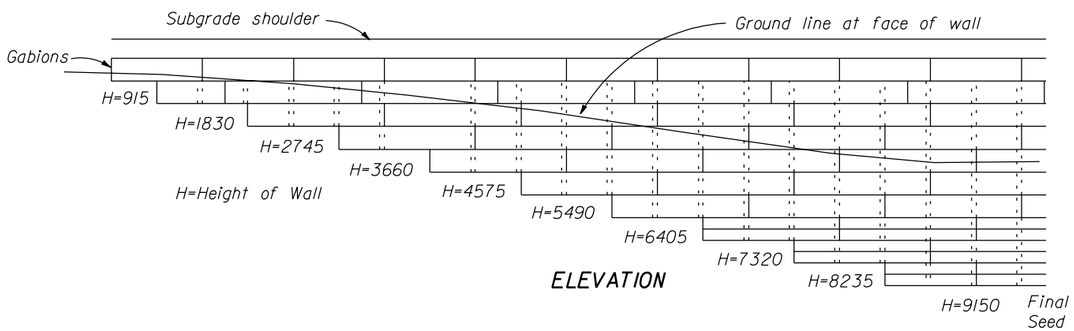

ELEVATION

TYPICAL GABION WALL

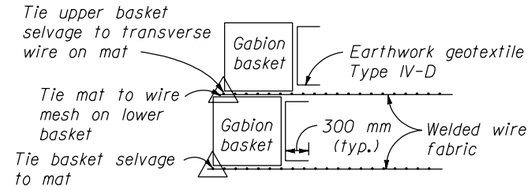

TYPICAL CONNECTION DETAIL

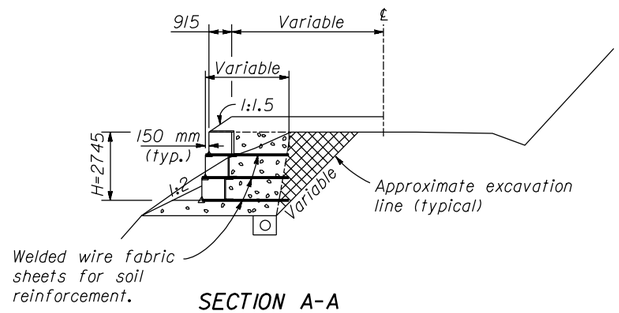

SECTION A-A

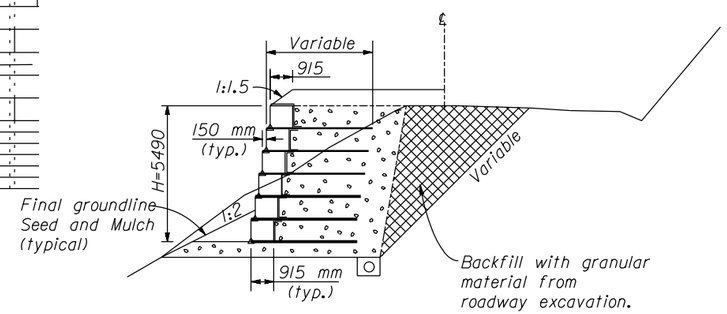

SECTION B-B

NOTE:

1. Dimensions not labeled are in millimeters.
2. The welded wire fabric sheets vary in length within each wall. The height (H) of the vertical face of the wall determines the length of the welded wire fabric for the entire section. See other plan sheets for fabric lengths, wire sizes and spacing and number of mats. Where the wall construction requires the width of the welded wire fabric sheets to be less than 1650 mm, the fabric wire may be field cut to fit. Cut fabric at center of mesh of welded wire fabric sheets.
3. Place layers of welded wire fabric sheets with 150 mm gaps between sheets. The 150 mm gaps are measured at the face of the wall. Connect the welded wire fabric sheets with spiral binders or tie wire to the front edge of each gabion basket.
4. The heights and quantities are subject to field adjustment. Any increase in wall heights over those shown on the plans require investigation to determine that the safe bearing pressure is not exceeded.
5. Average design assumption values. See the Geotechnical Report, if available, for site specific values.
   unit weight of backfill material 20.8 kN/m3.
   unit weight of filled gabions is 17.6 kN/m3.
   ø angle = 35° for backfill material.

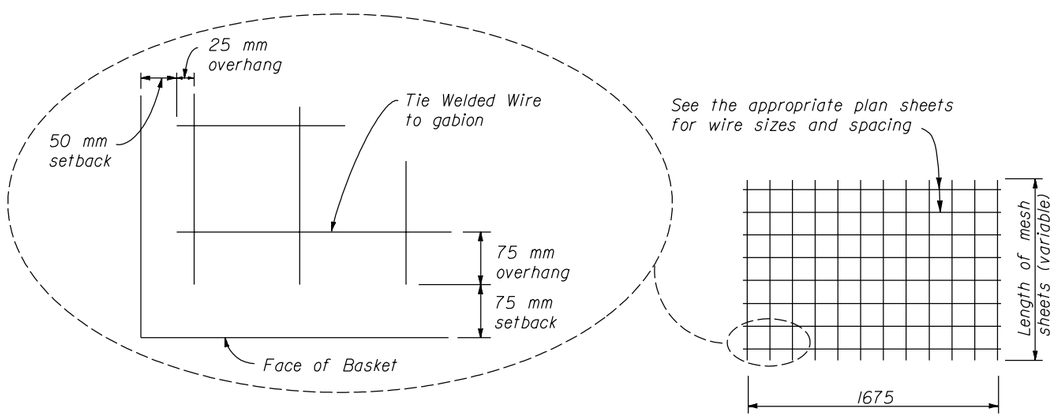

WELDED WIRE FABRIC SHEETS FOR SOIL REINFORCEMENT

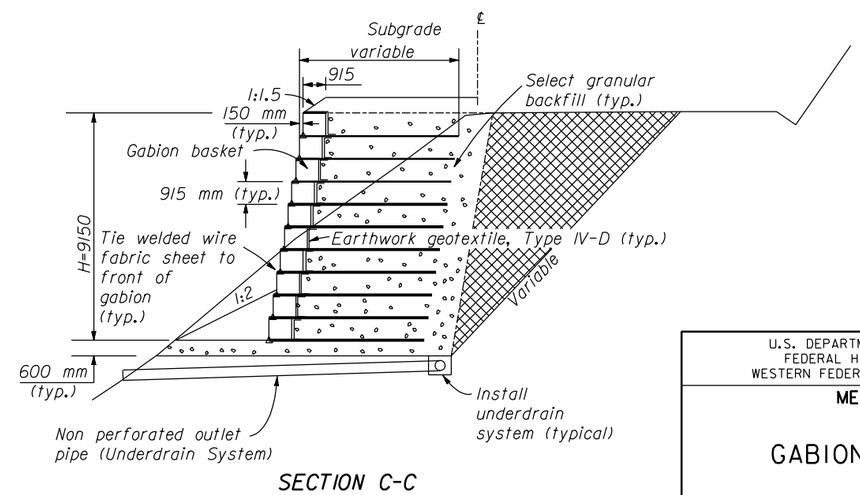

SECTION C-C

NO SCALE

U.S. DEPARTMENT OF TRANSPORTATION
FEDERAL HIGHWAY ADMINISTRATION
WESTERN FEDERAL LANDS HIGHWAY DIVISION

METRIC DETAIL

GABION FACED WALL

DETAIL APPROVED FOR USE 3/1996
REVISED: 2/1998

DETAIL
WM253-52

13 DEC 2000

f:\standraw\metric\details\wm25352.dgn