STATE	PROJECT	SHEET NUMBER

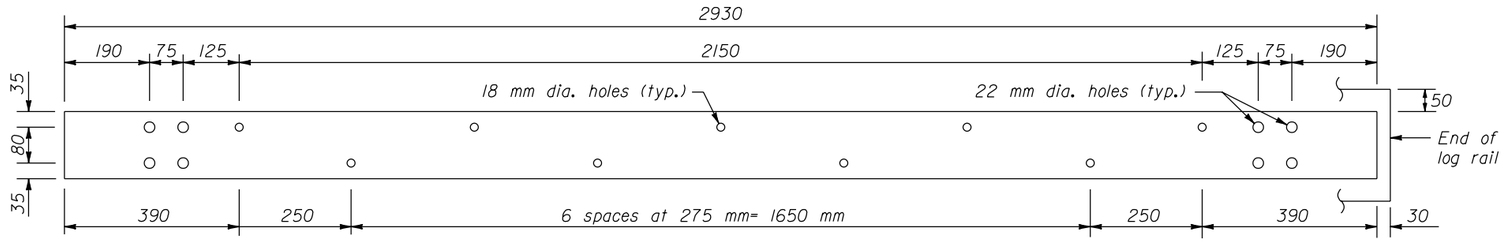

STEEL RAIL
150 x 10 x 2930 mm

NOTE:

1. Dimensions not labeled are in millimeters.
2. For details of the cast block-out and general notes for Steel-Backed Log Guardrail See Standard M617-81.
3. Furnish hardware in the metric sizes shown. Equivalent imperial sizes may be used when metric sizes are not available.

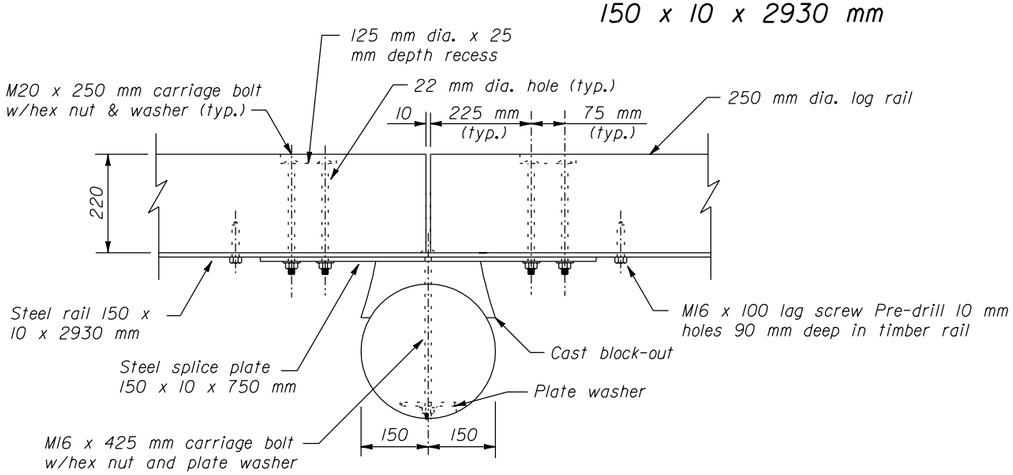

PLAN

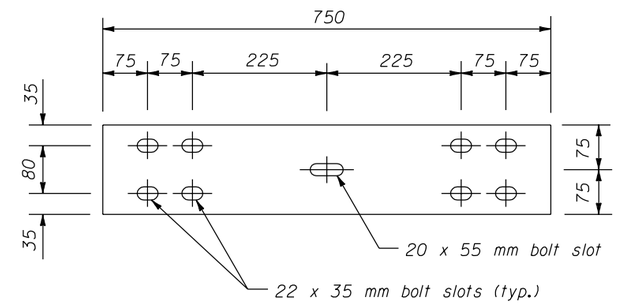

STEEL SPLICE PLATE
150 X 10 X 750 mm

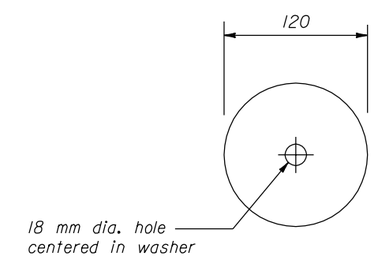

PLATE WASHER
120 mm Dia. 6 mm

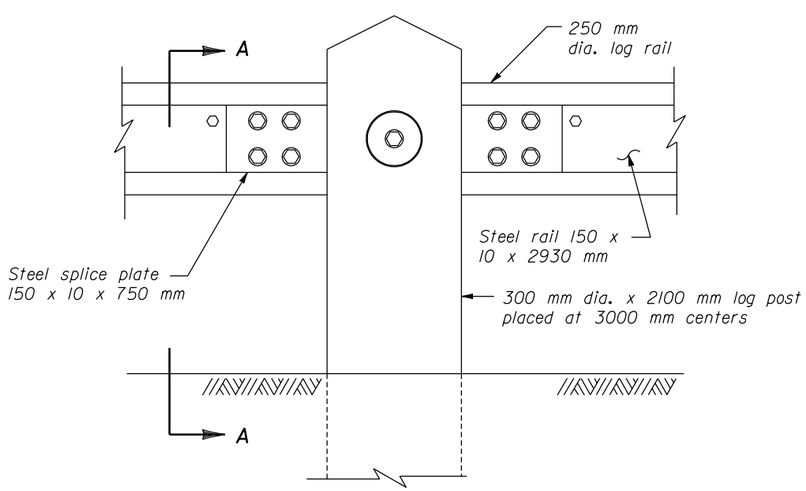

ELEVATION

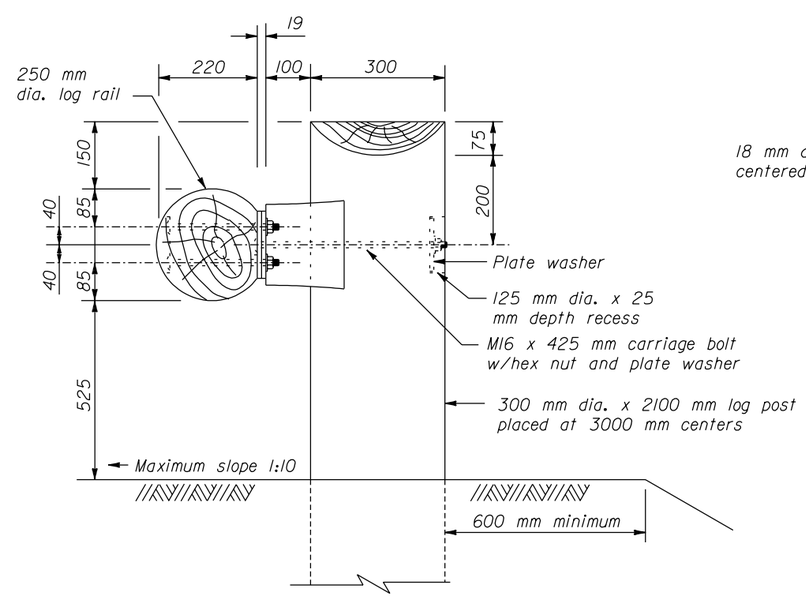

SECTION A-A

POST CONNECTION

NO SCALE

U.S. DEPARTMENT OF TRANSPORTATION
FEDERAL HIGHWAY ADMINISTRATION
WESTERN FEDERAL LANDS HIGHWAY DIVISION

METRIC DETAIL

STEEL-BACKED LOG RAIL

DETAIL APPROVED FOR USE --/----

REVISED:

DETAIL
WM617-80

30 NOV 2000

F:\standraw\metric\details\wm6178o.dgn