STATE	PROJECT	SHEET NUMBER

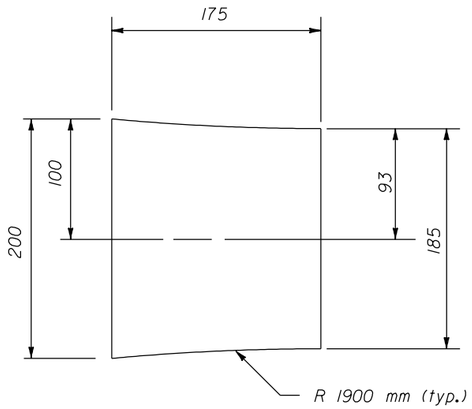

SIDE

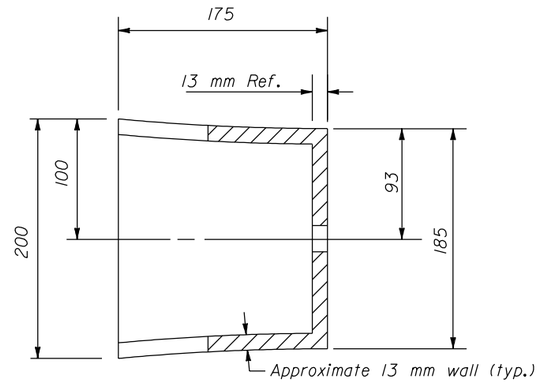

SECTION

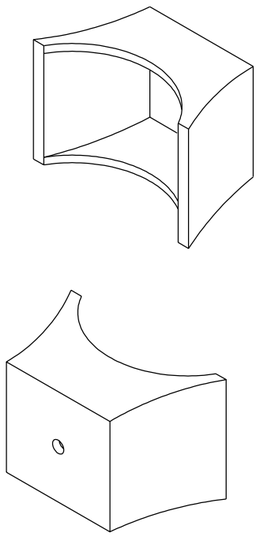

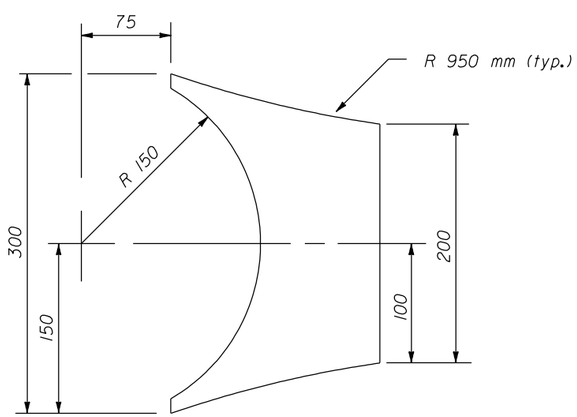

TOP

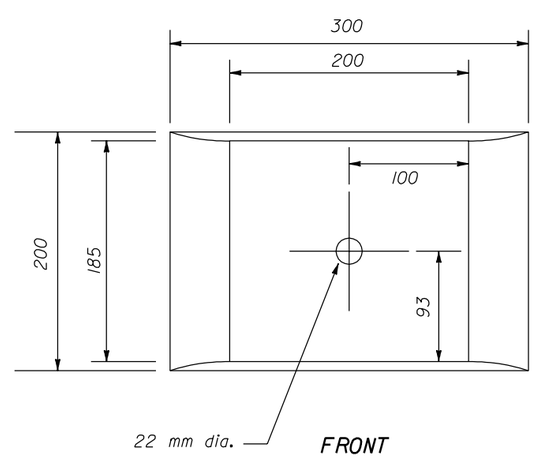

FRONT

NOTE:

1. Dimensions not labeled are in millimeters.
2. Furnish post and rail elements of peeled, round Coastal Douglas-fir, Western hemlock, Western larch, Western pine, Jack pine or Lodgepole pine.
3. Treat post and rail elements with water-borne preservative CCA according to AWPA Standard C14.
4. Install logs for rails butt to butt and tip to tip. A 50 mm maximum taper between the butt and tip ends of individual logs is permitted.
5. 6 meter logs are acceptable for rails provided the 50 mm maximum taper requirement is met and roadway curvature permits.
6. Make splices in rail elements at posts only.
7. Field cut log ends and dress as necessary to obtain tight fitting butt joints in full contact with each other at the log ends. Trim traffic exposed faces of log ends at the joints and elsewhere and dress as necessary to obtain a smooth surface with no protrusions.
8. Dress back face of log rail members to provide a flat surface wide enough to accomodate a 150 mm steel rail.
9. Apply an approved tinted brown color stain to all exposed surfaces of logs. Apply stain either as a part of or subsequent to preservative treatment.
10. Treat all field cuts and drill holes with two applications of the same preservative and stain as the rails and posts.
11. Furnish structural steel conforming to AASHTO M222 (ASTM A588).
12. Furnish corrosion resistant fastener hardware manufactured from steel conforming to AASHTO M164, Type 3 (ASTM A325, Type 3).
13. The nominal bolt length is 400 mm. Bolt lengths will vary according to log size. Extra long threaded bolts may be used, provided they are field cut so that none of the shank protrudes beyond the back of the post.
14. Cast block-out fits 300 mm diameter posts and 250 mm diameter rails with steel backing.
15. All cast steel, including hardware, conforms to AASHTO M222 or ASTM A588 (Grade C).
16. Apply a good sand cast finish to all exposed exterior surfaces. Lightly sandblast all exterior surfaces.
17. Unless otherwise specified, all exterior radii are 1 mm.
18. Unless otherwise specified all inside radii are 2 mm.

CAST BLOCK-OUT FOR 300 mm LOG POST
TO 250 mm LOG RAIL (CONCAVE OUTSIDE WALLS)

NO SCALE

U.S. DEPARTMENT OF TRANSPORTATION
FEDERAL HIGHWAY ADMINISTRATION
WESTERN FEDERAL LANDS HIGHWAY DIVISION

METRIC DETAIL

STEEL-BACKED LOG RAIL BLOCKOUT

DETAIL APPROVED FOR USE --/----

REVISED:

DETAIL WM617-81

30 NOV 2000

f:\standraw\metric\details\wm6178i.dgn