STATE	PROJECT	SHEET NUMBER

SLOPE PAVING FOR DOUBLE PIPE CULVERT

DIMENSIONS, REINFORCING STEEL AND CONCRETE TABLE OF QUANTITIES

D INCH	S FEET	SQUARE HEADWALL			15° SKEW			30° SKEW			45° SKEW		
		L FEET	CONC. CUYD	STEEL LB	L FEET	CONC. CUYD	STEEL LB	L FEET	CONC. CUYD	STEEL LB	L FEET	CONC. CUYD	STEEL LB
48	7.25	14.00	1.57	83	14.75	1.66	89	16.00	1.79	94	20.00	2.25	119
54	7.75	16.25	1.93	104	16.50	1.95	103	18.25	2.15	115	22.50	2.65	141
60	8.00	18.00	2.23	116	18.75	2.33	122	20.75	2.57	135	25.50	3.17	164
66	8.50	20.25	2.64	139	20.50	2.66	138	23.00	2.99	156	28.25	3.67	192
72	9.00	22.00	2.99	155	22.75	3.09	161	25.50	3.47	180	31.25	4.26	221
78	9.50	24.25	3.46	181	25.00	3.56	185	27.75	3.94	205	33.75	4.78	249
84	10.00	26.00	3.84	199	26.75	3.95	205	30.00	4.43	231	36.75	5.43	283
90	10.25	28.25	4.36	216	29.25	4.52	225	32.50	5.01	248	39.50	6.07	301
96	10.75	30.00	4.79	241	31.00	4.95	249	34.75	5.56	280	42.50	6.79	339
102	11.25	32.00	5.30	265	33.00	5.46	274	36.50	6.02	302	44.75	7.38	371
108	11.75	33.50	5.71	288	34.50	5.87	295	38.50	6.55	329	47.50	8.11	406
114	12.25	35.50	6.26	315	36.50	6.42	323	40.50	7.11	359	50.00	8.81	442
120	12.50	37.00	6.71	335	38.50	7.00	347	42.75	7.75	386	52.25	9.47	472
126	13.00	39.00	7.30	363	40.00	7.46	372	44.75	8.35	417	55.00	10.28	510
132	13.50	40.50	7.78	386	42.00	8.07	401	46.75	8.98	448	57.25	10.99	548
138	14.00	42.50	8.41	420	43.50	8.56	428	49.00	9.69	482	60.00	11.87	590
144	14.50	44.00	8.92	445	45.50	9.22	460	51.00	10.36	515	62.25	12.63	630
150	14.75	46.00	9.60	463	47.50	9.90	477	53.00	11.05	532	64.75	13.48	649
156	15.25	47.50	10.14	494	49.00	10.44	510	54.75	11.68	571	67.00	14.29	694
162	15.75	49.50	10.86	532	51.00	11.17	545	56.75	12.41	607	69.75	15.28	746
168	16.25	51.00	11.44	559	52.75	11.83	579	58.75	13.16	644	72.00	16.13	787
174	16.75	53.00	12.20	595	54.75	12.59	619	60.75	13.93	681	74.75	17.19	841
180	17.25	54.50	12.81	628	56.75	13.38	656	63.00	14.82	726	76.75	18.00	880

SLOPE PAVING FOR SINGLE PIPE CULVERT

DIMENSIONS, REINFORCING STEEL AND CONCRETE TABLE OF QUANTITIES

D INCH	S FEET	SQUARE HEADWALL			15° SKEW			30° SKEW			45° SKEW		
		L FEET	CONC. CUYD	STEEL LB	L FEET	CONC. CUYD	STEEL LB	L FEET	CONC. CUYD	STEEL LB	L FEET	CONC. CUYD	STEEL LB
48	7.25	8.00	0.93	48	8.25	0.96	50	9.25	1.08	57	11.25	1.31	69
54	7.75	9.25	1.14	60	9.50	1.17	61	10.75	1.33	70	13.00	1.60	83
60	8.00	10.50	1.37	69	10.75	1.39	72	12.00	1.56	79	14.75	1.92	98
66	8.50	11.75	1.61	82	12.25	1.68	86	13.50	1.85	94	16.50	2.25	115
72	9.00	13.00	1.87	95	13.50	1.94	98	15.00	2.15	109	18.50	2.66	136
78	9.50	14.25	2.14	110	14.75	2.22	113	16.50	2.48	126	20.25	3.05	157
84	10.00	15.50	2.44	123	16.00	2.51	128	18.00	2.83	143	22.00	3.46	175
90	10.25	16.75	2.75	134	17.25	2.82	139	19.25	3.15	154	23.75	3.90	190
96	10.75	18.00	3.07	150	18.75	3.21	159	20.75	3.54	174	25.50	4.35	213
102	11.25	19.25	3.41	170	20.00	3.55	174	22.25	3.95	196	27.25	4.83	239
108	11.75	20.50	3.77	186	21.25	3.91	193	23.75	4.38	217	29.00	5.34	263
114	12.25	21.75	4.15	206	22.50	4.29	212	25.00	4.76	235	30.75	5.86	291
120	12.50	23.00	4.54	220	23.75	4.69	230	26.50	5.23	255	32.50	6.42	313
126	13.00	24.25	4.95	244	25.00	5.10	249	28.00	5.72	278	34.25	6.99	343
132	13.50	25.50	5.38	263	26.50	5.59	272	29.50	6.22	303	36.00	7.59	371
138	14.00	26.75	5.82	286	27.75	6.04	296	31.00	6.75	329	37.75	8.21	401
144	14.50	28.00	6.28	306	29.00	6.50	316	32.25	7.23	354	39.50	8.85	431
150	14.75	29.25	6.75	320	30.25	6.98	333	33.75	7.79	370	41.25	9.52	452
156	15.25	30.50	7.25	347	31.50	7.48	357	35.25	8.38	401	43.25	10.29	493
162	15.75	31.75	7.76	373	32.75	7.99	384	36.75	8.99	433	45.00	11.00	526
168	16.25	33.00	8.28	397	34.25	8.60	413	38.00	9.53	458	46.75	11.74	565
174	16.75	34.25	8.83	424	35.50	9.15	438	39.50	10.17	488	48.50	12.50	600
180	17.25	35.50	9.39	449	36.75	9.72	469	41.00	10.84	521	50.25	13.29	641

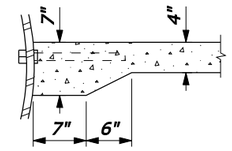

SECTION A-A

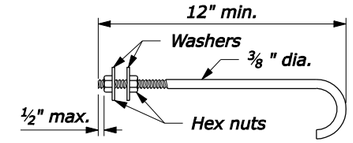

HOOK BOLT DETAIL

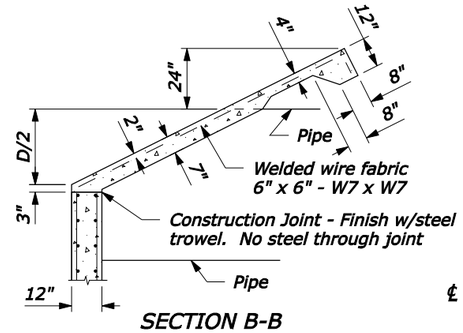

SECTION B-B

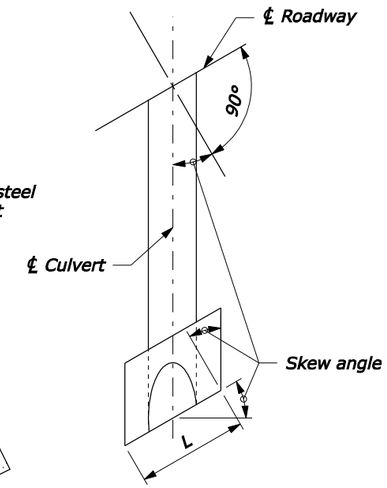

TYPICAL HALF PLAN

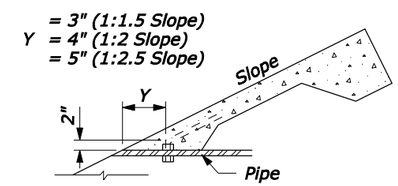

SECTION C-C

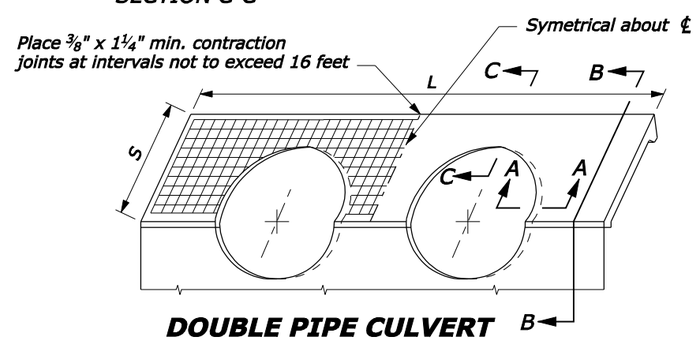

DOUBLE PIPE CULVERT

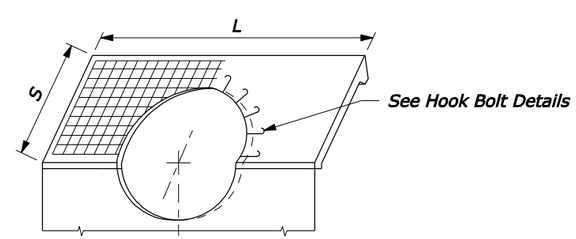

SINGLE PIPE CULVERT

NO SCALE

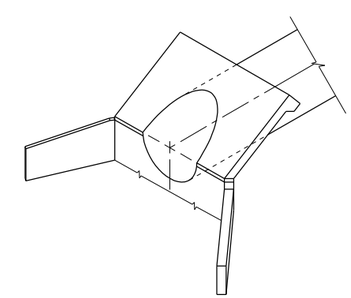

ISOMETRIC VIEW

NOTE:

1. Concrete conforms to Section 601. Chamfer all exposed edges 3/4" and finish all exposed surfaces with a Class 1 ordinary finish.
2. Clearance for reinforcing steel is 2" unless otherwise noted.
3. Set hook bolts on nominal 18" centers around pipe perimeter. Hook bolts conform to ASTM A307. Galvanize according to ASTM A153.
4. For installations with more than two pipe culverts, increase the dimension "L" and all quantities shown for double pipe installation by adding a length equal to dimension "B" as shown on Standard 601-1 and the incremental change in quantities for each additional pipe culvert.
5. For skews other than those shown, multiply quantities and dimensions "A", "B" & "L" for square headwalls by secant of the skew angle.
6. For the skew angle shown, the dimension "S" and the quantities for slope paving are computed for a 1V:1.5H sideslope. To compute dimension "S" and slope paving quantities for a 1V:2H slope multiply the values for that particular skew by 1.24, and for a 1V:2.5H slope multiply by 1.49.
7. Final quantities will be determined by using the tables on this standard.
8. Do not order materials until the length, skew angle, and slope bevel in the field have been approved.

U.S. DEPARTMENT OF TRANSPORTATION
FEDERAL HIGHWAY ADMINISTRATION
FEDERAL LANDS HIGHWAY

U.S. CUSTOMARY STANDARD

SLOPE PAVING FOR CONCRETE HEADWALLS

STANDARD APPROVED FOR USE 6/2005

REVISED:

STANDARD 601-2

F:\StanDraw\st60102.dgn [US Customary] 05-Oct-2005 11:00 AM