STATE	PROJECT	SHEET NUMBER

SLOPE PAVING FOR DOUBLE PIPE CULVERT

DIMENSIONS, REINFORCING STEEL AND CONCRETE TABLE OF QUANTITIES

D	S m	SQUARE HEADWALL			15° SKEW			30° SKEW			45° SKEW		
		L m	CONC. m3	STEEL kg	L m	CONC. m3	STEEL kg	L m	CONC. m3	STEEL kg	L m	CONC. m3	STEEL kg
1200	2.2	4.2	1.14	38	4.3	1.17	39	4.9	1.34	44	5.9	1.60	52
1350	2.3	4.8	1.38	45	4.9	1.40	46	5.5	1.57	51	6.9	1.99	64
1500	2.4	5.5	1.67	51	5.5	1.65	51	6.2	1.87	57	7.6	2.29	69
1650	2.6	6.1	1.94	62	6.2	1.96	63	6.9	2.18	70	8.5	2.69	86
1800	2.7	6.7	2.23	68	6.8	2.24	69	7.7	2.55	78	9.4	3.11	95
1950	2.8	7.1	2.44	74	7.4	2.55	77	8.4	2.91	89	10.1	3.47	106
2100	3.0	7.8	2.80	87	8.1	2.91	91	9.0	3.23	101	11.1	4.00	123
2250	3.1	8.4	3.14	97	8.7	3.25	101	9.7	3.63	111	12.0	4.50	138
2400	3.2	9.0	3.49	107	9.3	3.61	110	10.4	4.04	123	12.7	4.93	150
2550	3.4	9.6	3.86	120	9.9	3.98	122	10.9	4.36	134	13.5	5.42	166
2700	3.5	10.1	4.19	128	10.4	4.31	132	11.7	4.86	148	14.1	5.82	178
2850	3.7	10.6	4.54	140	11.0	4.71	146	12.3	5.27	162	14.9	6.36	195
3000	3.8	11.2	4.95	152	11.5	5.07	155	12.8	5.63	172	15.7	6.92	211
3150	3.9	11.5	5.19	153	12.1	5.50	163	13.4	6.07	180	16.4	7.43	219
3300	4.1	12.1	5.64	173	12.7	5.95	182	14.0	6.53	199	17.2	8.03	246
3450	4.2	12.7	6.10	183	13.2	6.35	190	14.6	7.00	209	18.0	8.65	259
3600	4.3	13.2	6.50	194	13.6	6.69	199	15.1	7.41	221	18.6	9.15	271
3750	4.5	13.8	7.00	210	14.1	7.10	214	15.9	8.06	241	19.4	9.81	293
3900	4.6	14.3	7.43	221	14.7	7.61	227	16.5	8.57	255	20.2	10.49	312
4050	4.7	14.9	7.96	235	15.2	8.06	239	17.1	9.11	270	20.8	11.04	326
4200	4.9	15.4	8.42	253	15.8	8.60	257	17.6	9.57	286	21.6	11.76	350
4350	5.0	15.7	8.72	260	16.3	9.07	270	18.2	10.14	300	22.4	12.51	370
4500	5.1	16.3	9.29	269	16.9	9.64	280	18.8	10.71	309	23.1	13.19	379

SLOPE PAVING FOR SINGLE PIPE CULVERT

DIMENSIONS, REINFORCING STEEL AND CONCRETE TABLE OF QUANTITIES

D	S m	SQUARE HEADWALL			15° SKEW			30° SKEW			45° SKEW		
		L m	CONC. m3	STEEL kg	L m	CONC. m3	STEEL kg	L m	CONC. m3	STEEL kg	L m	CONC. m3	STEEL kg
1200	2.2	2.4	0.68	22	2.5	0.71	23	2.8	0.79	26	3.4	0.96	31
1350	2.3	2.8	0.84	27	2.9	0.87	27	3.2	0.96	30	3.9	1.17	37
1500	2.4	3.2	1.02	30	3.3	1.05	31	3.6	1.14	34	4.5	1.43	43
1650	2.6	3.5	1.16	36	3.6	1.19	37	4.1	1.37	43	5.0	1.67	52
1800	2.7	3.9	1.36	41	4.0	1.39	42	4.5	1.57	47	5.5	1.92	58
1950	2.8	4.3	1.57	47	4.4	1.61	48	4.9	1.79	53	6.0	2.19	66
2100	3.0	4.7	1.80	54	4.8	1.83	56	5.4	2.07	63	6.6	2.52	77
2250	3.1	5.0	1.99	59	5.2	2.07	63	5.8	2.31	71	7.1	2.83	86
2400	3.2	5.4	2.24	67	5.6	2.32	69	6.2	2.57	77	7.6	3.15	93
2550	3.4	5.8	2.50	76	6.0	2.59	78	6.7	2.89	87	8.2	3.54	106
2700	3.5	6.2	2.78	83	6.4	2.87	86	7.1	3.18	95	8.7	3.89	117
2850	3.7	6.5	3.01	91	6.8	3.16	96	7.5	3.47	105	9.2	4.26	129
3000	3.8	6.9	3.31	99	7.1	3.40	102	8.0	3.84	115	9.8	4.71	141
3150	3.9	7.3	3.63	105	7.5	3.72	108	8.4	4.17	121	10.3	5.11	148
3300	4.1	7.7	3.95	119	7.9	4.04	120	8.8	4.50	134	10.8	5.53	165
3450	4.2	8.0	4.22	124	8.3	4.39	129	9.3	4.92	145	11.3	5.96	176
3600	4.3	8.4	4.58	134	8.7	4.74	139	9.7	5.29	155	11.9	6.49	190
3750	4.5	8.8	4.94	145	9.1	5.11	150	10.1	5.66	167	12.4	6.96	205
3900	4.6	9.2	5.32	156	9.5	5.49	161	10.6	6.13	179	12.9	7.44	218
4050	4.7	9.5	5.63	164	9.9	5.89	170	11.0	6.53	191	13.5	8.02	232
4200	4.9	9.9	6.04	176	10.2	6.21	182	11.4	6.95	203	14.0	8.54	249
4350	5.0	10.3	6.46	189	10.6	6.63	194	11.9	7.46	218	14.5	9.07	264
4500	5.1	10.7	6.89	197	11.0	7.06	201	12.3	7.90	224	15.1	9.71	276

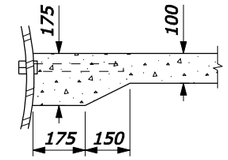

SECTION A-A

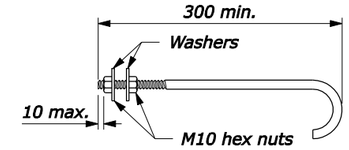

HOOK BOLT DETAIL

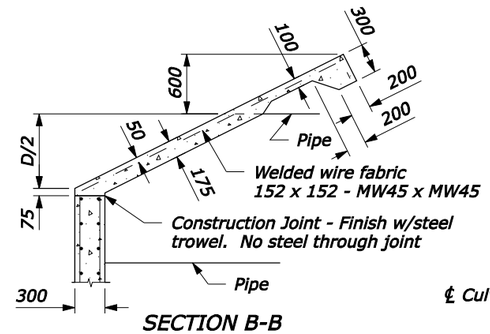

SECTION B-B

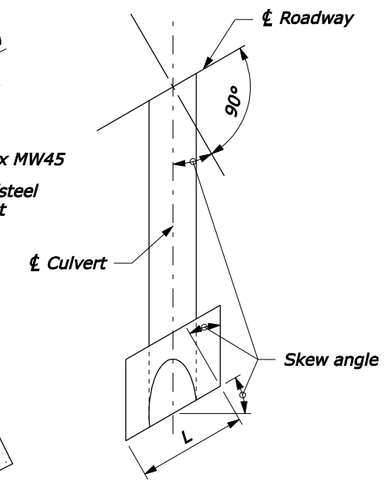

TYPICAL HALF PLAN

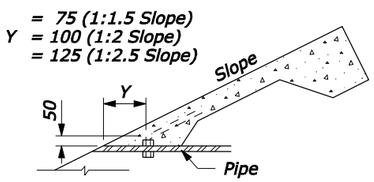

SECTION C-C

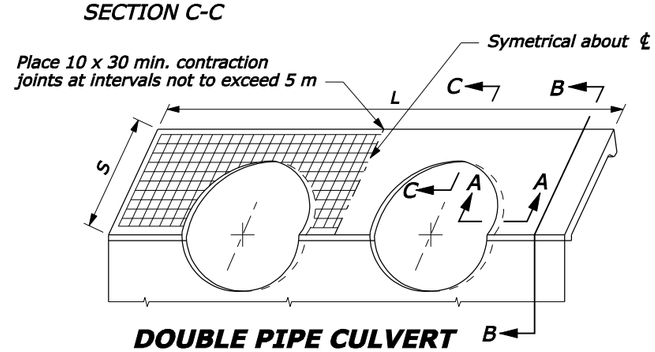

DOUBLE PIPE CULVERT

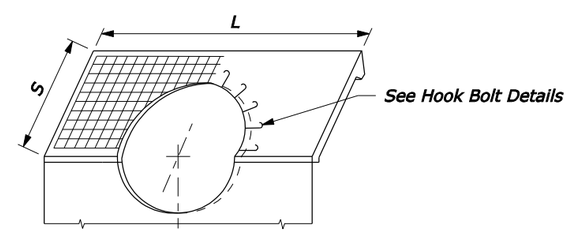

SINGLE PIPE CULVERT

NO SCALE

NOTE:

1. Concrete conforms to Section 601. Chamfer all exposed edges 20 mm and finish all exposed surfaces with a Class 1 ordinary finish.
2. Clearance for reinforcing steel is 50 mm unless otherwise noted.
3. Set hook bolts on nominal 450 mm centers around pipe perimeter. Hook bolts conform to ASTM A307. Galvanize according to ASTM A153.
4. For installations with more than two pipe culverts, increase the dimension "L" and all quantities shown for double pipe installation by adding a length equal to dimension "B" as shown on Standard M601-1 and the incremental change in quantities for each additional pipe culvert.
5. For skews other than those shown, multiply quantities and dimensions "A", "B" & "L" for square headwalls by secant of the skew angle.
6. For the skew angle shown, the dimension "S" and the quantities for slope paving are computed for a 1V:1.5H sideslope. To compute dimension "S" and slope paving quantities for a 1V:2H slope multiply the values for that particular skew by 1.24, and for a 1V:2.5H slope multiply by 1.49.
7. Final quantities will be determined by using the tables on this standard.
8. Do not order materials until the length, skew angle, and slope bevel in the field have been approved.
9. Dimensions without units are millimeters.

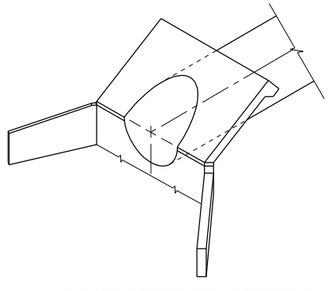

ISOMETRIC VIEW

U.S. DEPARTMENT OF TRANSPORTATION
FEDERAL HIGHWAY ADMINISTRATION
FEDERAL LANDS HIGHWAY

METRIC STANDARD

SLOPE PAVING FOR CONCRETE HEADWALLS

STANDARD APPROVED FOR USE 3/1996
REVISED: 5/1997 6/2005

STANDARD
M601-2

F:\StanDraw\st60102.dgn [Metric] 05-Oct-2005 10:59 AM