STATE	PROJECT	SHEET NUMBER

WINGWALLS FOR CONCRETE HEADWALLS

DIMENSIONS, REINFORCING STEEL AND CONCRETE TABLE OF QUANTITIES

D	H	0° WINGWALL SKEW			15° WINGWALL SKEW			30° WINGWALL SKEW			45° WINGWALL SKEW			60° WINGWALL SKEW		
		W m	CONC. m3	STEEL kg	W m	CONC. m3	STEEL kg	W m	CONC. m3	STEEL kg	W m	CONC. m3	STEEL kg	W m	CONC. m3	STEEL kg
1200	1.500	1.8	2.05	80	1.8	2.03	80	1.8	2.01	80	1.8	2.00	80	1.8	1.99	80
1350	1.575	1.8	2.08	80	1.8	2.06	80	1.8	2.04	80	1.8	2.03	80	2.1	2.30	92
1500	1.650	1.8	2.11	81	1.8	2.09	81	1.8	2.07	81	1.8	2.05	81	2.3	2.52	101
1650	1.725	1.8	2.14	82	1.8	2.12	82	1.8	2.10	82	1.8	2.08	82	2.5	2.75	108
1800	1.800	1.8	2.17	82	1.8	2.15	82	1.8	2.12	82	2.0	2.30	92	2.7	2.98	117
1950	1.875	1.8	2.20	83	1.8	2.17	83	1.8	2.15	83	2.1	2.43	95	3.0	3.32	130
2100	1.950	1.8	2.23	84	1.8	2.20	84	1.9	2.28	88	2.3	2.66	104	3.2	3.56	140
2250	2.025	1.8	2.26	85	1.8	2.23	85	2.0	2.41	95	2.4	2.80	110	3.4	3.80	147
2400	2.100	1.8	2.30	85	1.9	2.36	90	2.1	2.54	97	2.6	3.04	117	3.6	4.05	156

RECOMMENDED WINGWALL SKEWS

WINGWALL	PIPE SKEW			
	0°	15°	30°	45°
1	45°	45°	60°	60°
2	45°	30°	15°	0°
3	45°	30°	15°	0°
4	45°	45°	60°	60°

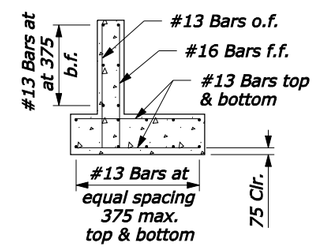

SECTION A-A

NOTE:

1. Concrete conforms to Section 601. Chamfer all exposed edges 20 mm and finish all exposed surfaces with a Class 1 ordinary finish.
2. Clearance for reinforcing steel is 50 mm unless otherwise noted.
3. For skew angles shown in table, the length W and quantities for wingwalls are computed for a 1V:1.5V side slope. For 1H:2V or 1H:2.5V slopes compute length W with the following equation:
   W=D/2 x slope x secant (wingwall skew angle)
   Minimum W not less than 1.8 meters.
4. Quantities shown in table are for one wingwall only. For lengths, W, not shown in table, approximate the quantities by multiplying the quantities for 0° skew and a given height, H, by the factor 1 + [(W-1.8) x 0.46].
5. See Standards M601-1 and M601-2 for headwall and slope paving dimensions.
6. Final quantities will be determined by using the tables on this standard.
7. Do not order materials until the length, skew angle, and slope bevel in the field have been approved.
8. Dimensions without units are millimeters.

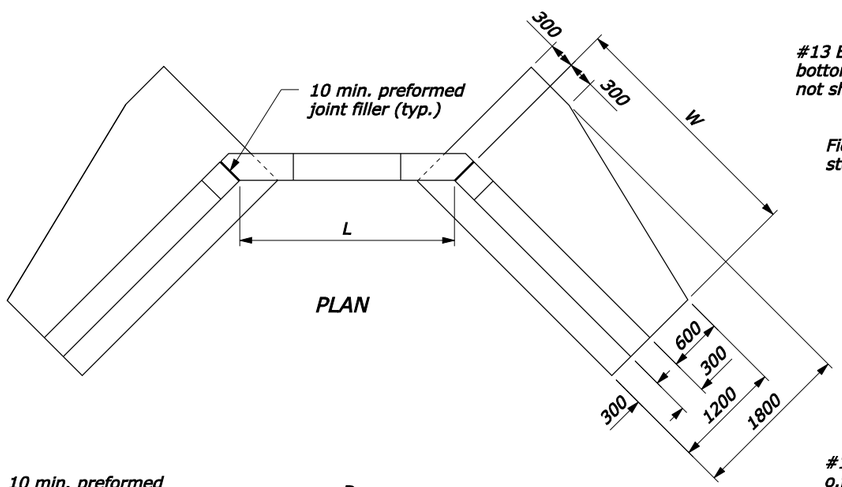

PLAN

ELEVATION

HEADWALL AND WINGWALL

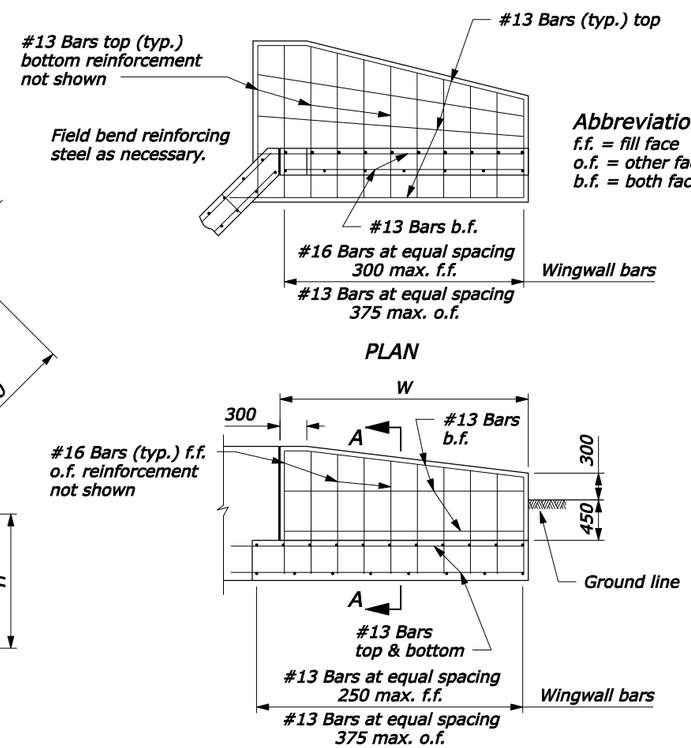

PLAN

ELEVATION

TYPICAL WINGWALL

Abbreviations:

f.f. = fill face
o.f. = other face
b.f. = both faces

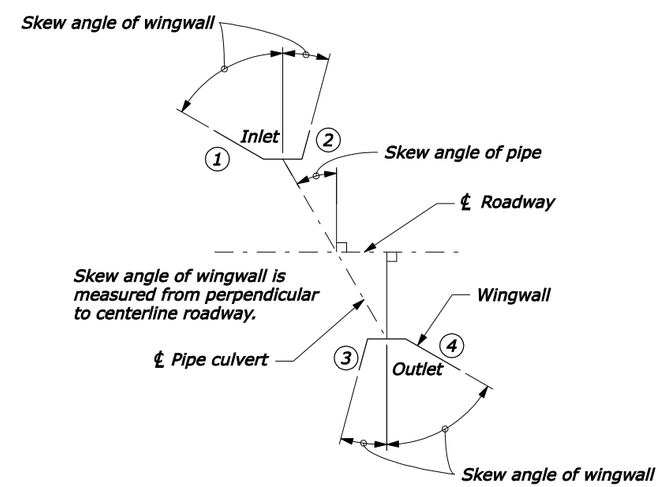

WINGWALL LAYOUT

NO SCALE

U.S. DEPARTMENT OF TRANSPORTATION
FEDERAL HIGHWAY ADMINISTRATION
FEDERAL LANDS HIGHWAY

METRIC STANDARD

WINGWALLS FOR CONCRETE HEADWALLS

STANDARD APPROVED FOR USE 3/1996
REVISED: 5/1997 6/2005

STANDARD M601-3

05-Oct-2005 11:02 AM

F:\StanDraw\st60103.dgn [Metric]