STATE	PROJECT	SHEET NUMBER

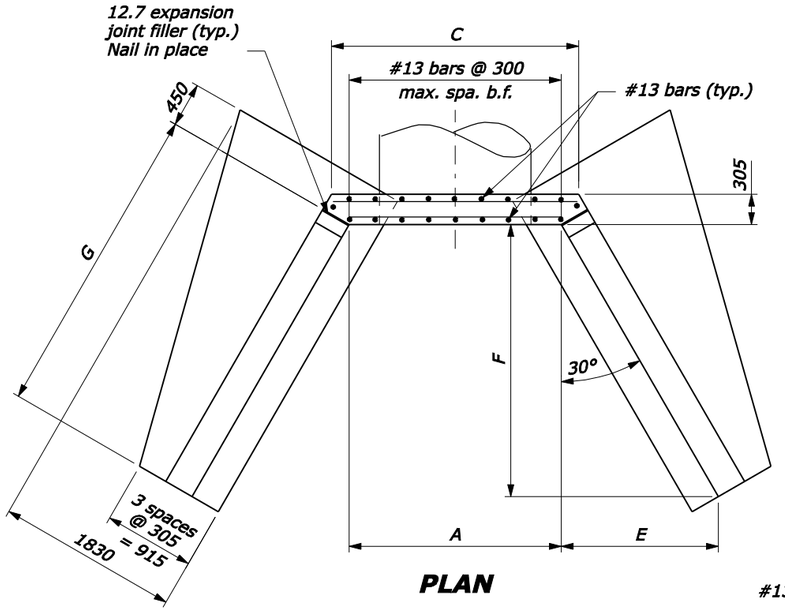

PLAN

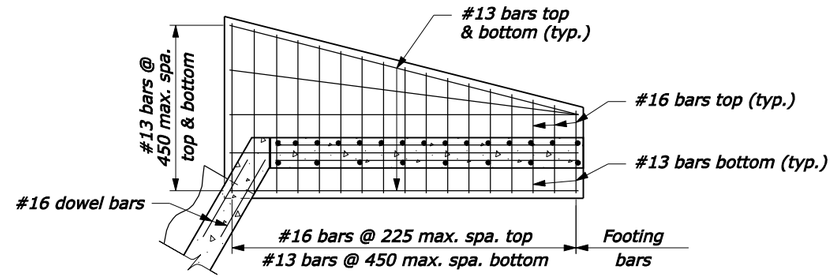

WINGWALL PLAN

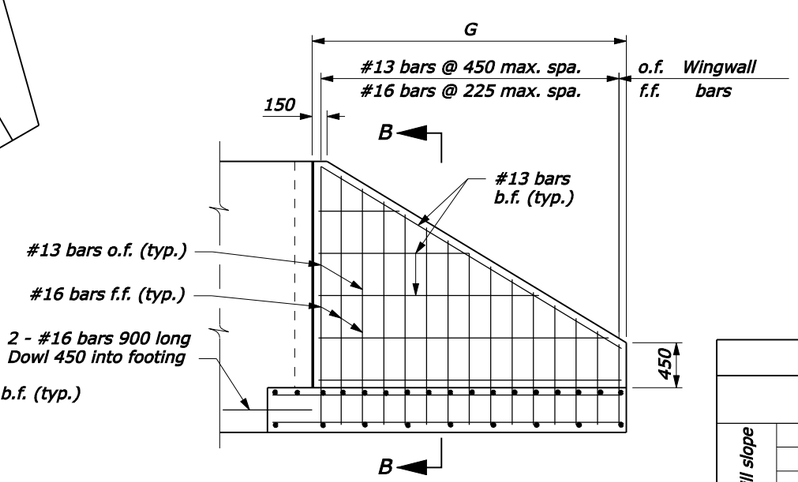

WINGWALL ELEVATION

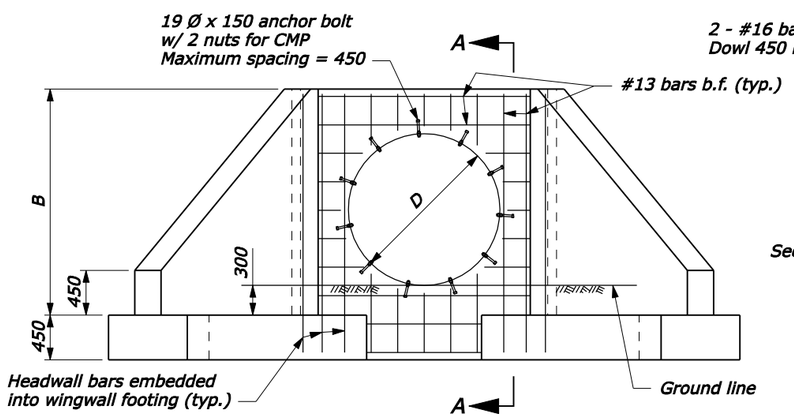

FRONT ELEVATION

(Showing headwall reinforcement)

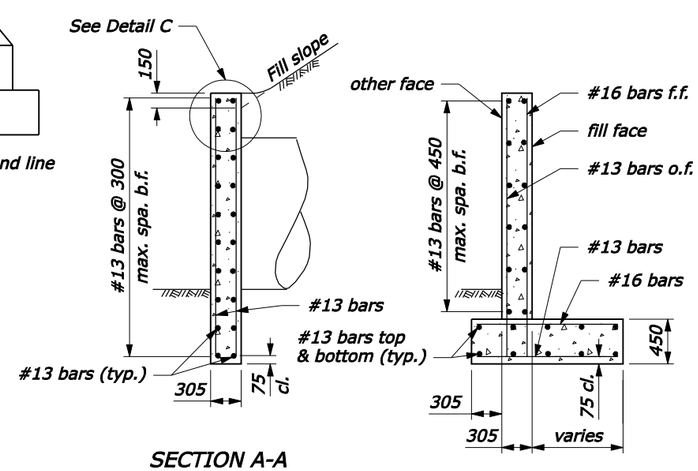

SECTION A-A

SECTION B-B

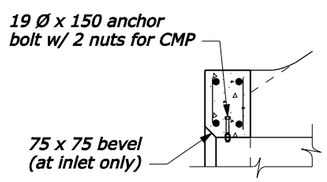

DETAIL C

(For Metal Pipes)

NOTE:

1. This detail applies for normal crossings and skews up to 15°.
2. On shallow fill, where headwall is 600 mm or less below shoulder line, construct the headwall parallel to line and grade of the shoulder.
3. Do not allow top of wingwall to project above fill slope, ditch slope or shoulder.
4. Concrete shall conform to Section 601. Chamfer all exposed edges 20 mm and finish all exposed surfaces with a Class 1 ordinary surface finish. Joint filler shall conform to AASHTO M213 and shall be subsidary to concrete quantity.
5. Bell end of concrete pipe may replace bevel at inlet headwall.
6. Quantities shown in table are for one headwall and two wingwalls and are based on CMP. Concrete and steel quantities shown will be used as basis for final payment for headwall/wingwalls constructed according to this standard.
7. Clearance for reinforcing steel is 50 mm unless shown otherwise.
8. Anchor bolts shall conform to ASTM A307. Galvanize bolts and nuts to conform to ASTM A153. Anchor bolts shall be subsidary to reinforcing steel quantity.
9. Dimensions without units are millimeters.

DIMENSIONS AND QUANTITIES

		D (Diameter of pipe culvert)							
		1050	1200	1350	1500	1650	1800	1950	2100
1V:1.5H fill slope	A	1675	1830	1980	2135	2285	2440	2590	2745
	B	1815	1970	2120	2275	2425	2580	2730	2885
	C	2025	2180	2330	2485	2635	2790	2940	3095
	E	1180	1315	1450	1580	1710	1845	1975	2110
	F	2050	2280	2505	2735	2960	3195	3420	3655
	G	2365	2630	2895	3160	3420	3690	3950	4220
Conc. (m³)		6.1	6.9	7.7	8.5	9.4	10.2	11.1	12.1
Steel (kg)		295	334	371	398	443	471	522	567
1V:2H fill slope	A	1675	1830	1980	2135	2285	2440	2590	2745
	B	1815	1970	2120	2275	2425	2580	2730	2885
	C	2025	2180	2330	2485	2635	2790	2940	3095
	E	1575	1755	1925	2110	2280	2460	2635	2815
	F	2730	3040	3340	3650	3950	4260	4560	4870
	G	3150	3510	3855	4215	4560	4920	5265	5625
Conc. (m³)		7.7	8.6	9.6	10.7	11.8	12.9	14.0	15.2
Steel (kg)		362	413	454	501	547	596	642	705

Abbreviations:
f.f. = Fill face
o.f. = Other face
b.f. = Both faces

NO SCALE

U.S. DEPARTMENT OF TRANSPORTATION
FEDERAL HIGHWAY ADMINISTRATION
FEDERAL LANDS HIGHWAY

METRIC STANDARD

CONCRETE HEADWALL/WINGWALL FOR SINGLE NORMAL 1050 TO 2100 PIPE CULVERT

STANDARD APPROVED FOR USE 3/1996
REVISED: 5/1997 6/2005

STANDARD M601-5

05-Oct-2005 12:16 PM
F:\StanDraw\st60105.dgn [Metric]