STATE	PROJECT	SHEET NUMBER

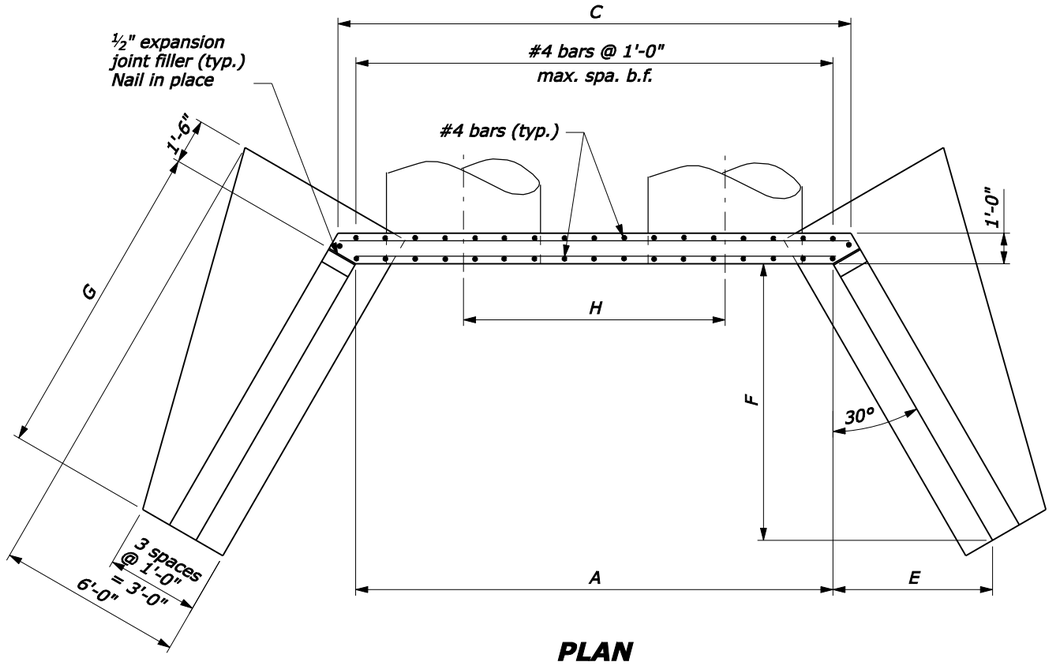

PLAN

NOTE:

1. This detail applies for normal crossings and skews up to 15°.
2. Quantities shown in table are for one headwall and two wingwalls and are based on CMP. Concrete and steel quantities shown will be used as basis for final payment for headwall/wingwalls constructed according to this standard.
3. For dimensions and reinforcing details not shown, and additional Notes see Standard 601-5.

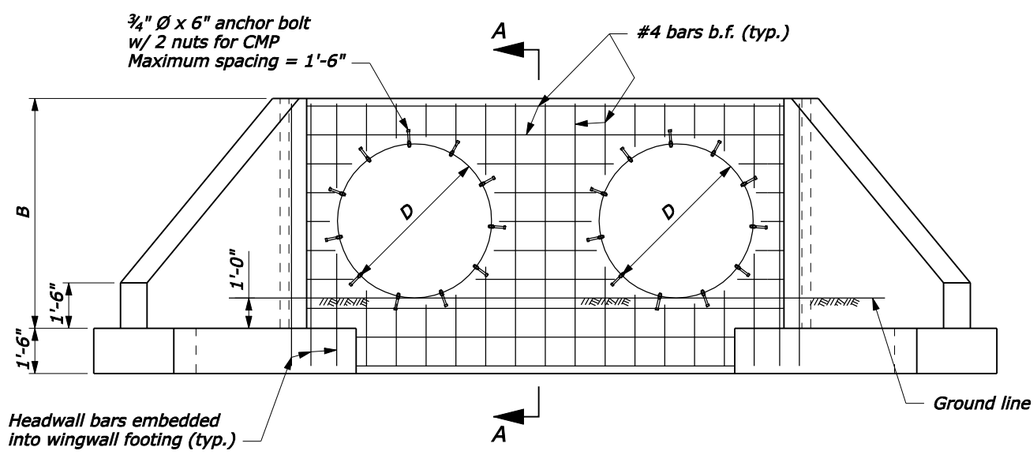

FRONT ELEVATION
(Showing headwall reinforcement)

DIMENSIONS AND QUANTITIES

		D (Diameter of pipe culvert)							
		42"	48"	54"	60"	66"	72"	78"	84"
	A	11'-6"	12'-10¼"	14'-2"	15'-6"	16'-10"	18'-2"	19'-5¾"	20'-10"
	C	12'-7¾"	14'-0"	15'-3¾"	16'-7¾"	17'-11¾"	19'-4"	20'-7¾"	21'-11¾"
	H	6'-0"	6'-10"	7'-8"	8'-6"	9'-4"	10'-2"	11'-0"	11'-10"
1V:1.5H fill slope	Conc. (CUYD)	9.3	10.6	11.9	13.2	14.6	16.1	17.6	19.2
	Steel (LB)	752	850	961	1020	1166	1228	1380	1488
1V:2H fill slope	Conc. (CUYD)	11.3	12.9	14.4	16.1	17.8	19.6	21.4	23.3
	Steel (LB)	900	1023	1144	1247	1395	1503	1644	1793
Add. Conc. per pipe (CUYD)		1.3	1.6	1.8	2.1	2.4	2.7	3.0	3.4
Add. Steel per pipe (LB)		120	122	154	165	202	213	254	267

NO SCALE

U.S. DEPARTMENT OF TRANSPORTATION
FEDERAL HIGHWAY ADMINISTRATION
FEDERAL LANDS HIGHWAY

U.S. CUSTOMARY STANDARD

CONCRETE HEADWALL/WINGWALL FOR MULTIPLE NORMAL 42" TO 84" PIPE CULVERT

STANDARD APPROVED FOR USE 6/2005
REVISED:

STANDARD 601-7

05-Oct-2005 12:24 PM
F:\StanDraw\st60107.dgn [US Customary]