STATE	PROJECT	SHEET NUMBER

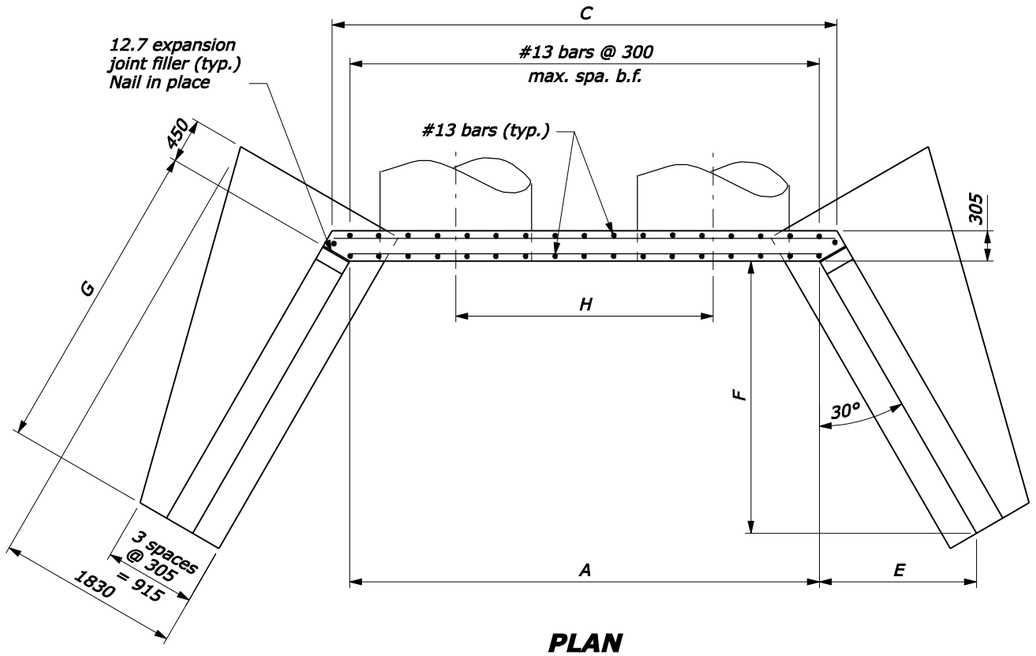

PLAN

NOTE:

1. This detail applies for normal crossings and skews up to 15°.
2. Quantities shown in table are for one headwall and two wingwalls and are based on CMP. Concrete and steel quantities shown will be used as basis for final payment for headwall/wingwalls constructed according to this standard.
3. For dimensions and reinforcing details not shown, and additional Notes see Standard M601-5.
4. Dimensions without units are millimeter.

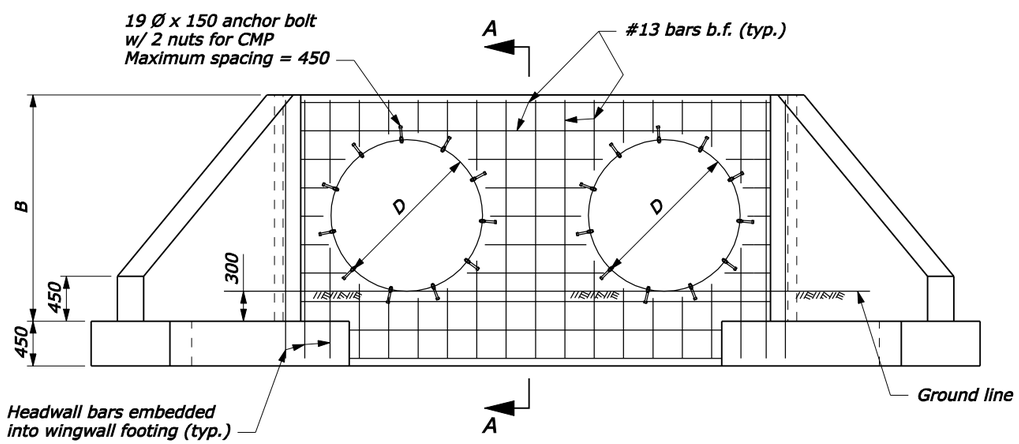

FRONT ELEVATION

(Showing headwall reinforcement)

DIMENSIONS AND QUANTITIES

		D (Diameter of pipe culvert)							
		1050	1200	1350	1500	1650	1800	1950	2100
	A	3505	3915	4315	4725	5130	5540	5940	6350
	C	3855	4265	4665	5075	5480	5890	6290	6700
	H	1830	2085	2335	2590	2845	3100	3350	3605
1V:1.5H fill slope	Conc. (m³)	7.1	8.1	9.1	10.1	11.2	12.3	13.4	14.6
	Steel (kg)	341	385	436	462	529	557	625	675
1V:2H fill slope	Conc. (m³)	8.6	9.8	11.0	12.3	13.6	15.0	16.3	17.8
	Steel (kg)	408	464	518	565	633	681	746	813
Add. Conc. per pipe (m³)		1.0	1.2	1.4	1.6	1.8	2.1	2.3	2.6
Add. Steel per pipe (kg)		55	55	70	75	91	97	115	121

NO SCALE

U.S. DEPARTMENT OF TRANSPORTATION
FEDERAL HIGHWAY ADMINISTRATION
FEDERAL LANDS HIGHWAY

METRIC STANDARD

CONCRETE HEADWALL/WINGWALL FOR MULTIPLE NORMAL 1050 TO 2100 PIPE CULVERT

STANDARD APPROVED FOR USE 3/1996

REVISED: 5/1997 6/2005

STANDARD M601-7

05-Oct-2005 12:23 PM
F:\StanDraw\jst60107.dgn [Metric]