STATE	PROJECT	SHEET NUMBER

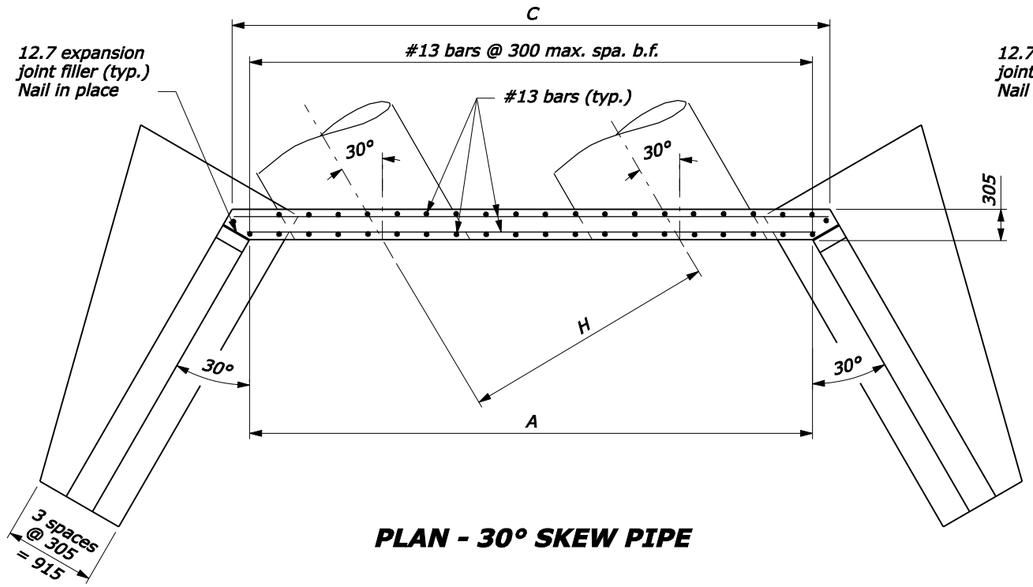

PLAN - 30° SKEW PIPE

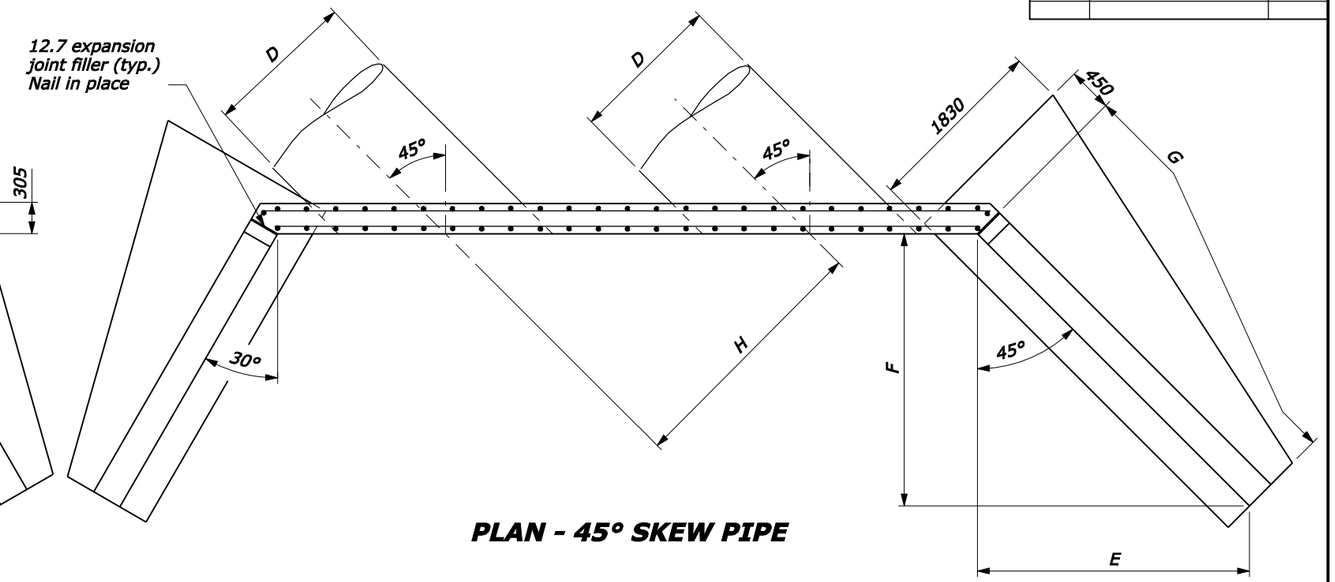

PLAN - 45° SKEW PIPE

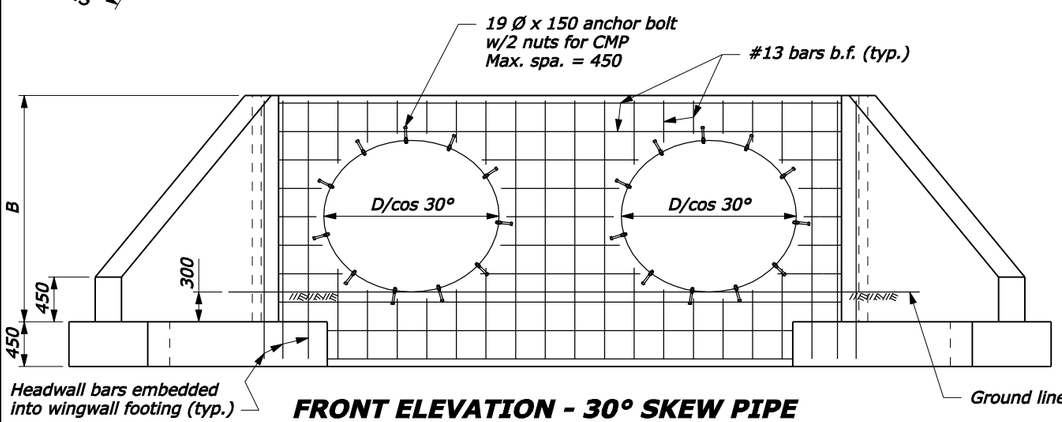

FRONT ELEVATION - 30° SKEW PIPE

(Showing headwall reinforcement)

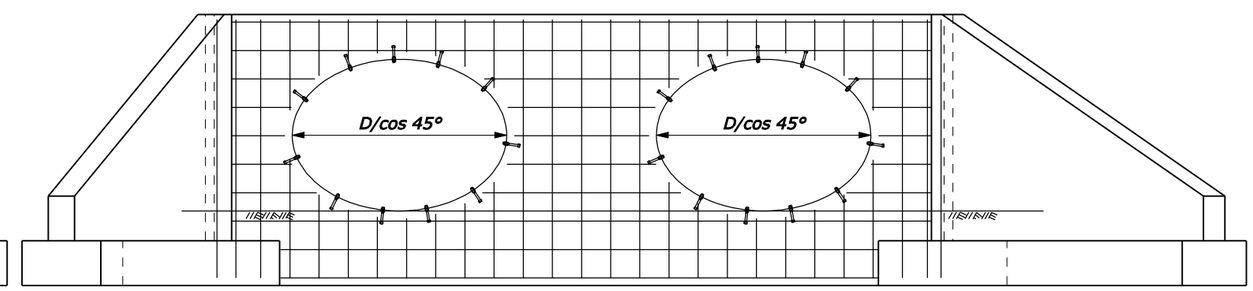

FRONT ELEVATION - 45° SKEW PIPE

(Showing headwall reinforcement)

NOTE:

1. Use the 30° Skew Detail for skews greater than 15° to 37° 30'. Use the 45° Skew Detail for skews greater than 37° 30' to 45°.
2. Quantities shown in table are for one headwall and two wingwalls and are based on CMP. Concrete and steel quantities shown will be used as basis for final payment for headwall/ wingwalls constructed according to this standard.
3. For dimensions and reinforcing details not shown, and additional notes see Standards M601-5 and 6.
4. Dimensions without units are millimeters.

DIMENSIONS AND QUANTITIES FOR 30° SKEW PIPE

		D (Diameter of pipe culvert)							
		1050	1200	1350	1500	1650	1800	1950	2100
	A	4255	4725	5190	5660	6130	6605	7065	7540
	C	4605	5075	5540	6010	6480	6955	7415	7890
	H	1830	2085	2335	2590	2845	3100	3350	3605
1V:1.5H fill slope	Conc. (m³)	7.6	8.6	9.6	10.7	11.8	13.0	14.2	15.5
	Steel (kg)	362	406	460	493	557	591	663	713
1V:2H fill slope	Conc. (m³)	9.1	10.3	11.6	12.9	14.2	15.7	17.1	18.7
	Steel (kg)	428	485	542	595	660	715	783	851
Add. Conc. per pipe (m³)		1.2	1.4	1.6	1.8	2.1	2.4	2.7	3.0
Add. Steel per pipe (kg)		61	69	78	86	101	107	127	133

DIMENSIONS AND QUANTITIES FOR 45° SKEW PIPE

		D (Diameter of pipe culvert)							
		1050	1200	1350	1500	1650	1800	1950	2100
	A	5315	5895	6460	7040	7610	8190	8760	9340
	C	5620	6200	6765	7345	7915	8495	9065	9645
	H	1830	2085	2335	2590	2845	3100	3350	3605
1V:1.5H fill slope	Conc. (m³)	8.6	9.8	11.0	12.3	13.6	14.9	16.3	17.8
	Steel (kg)	420	470	535	575	659	699	774	836
1V:2H fill slope	Conc. (m³)	10.3	11.7	13.2	14.7	16.2	17.9	19.6	21.3
	Steel (kg)	494	562	631	690	778	840	921	997
Add. Conc. per pipe (m³)		1.4	1.7	2.0	2.3	2.6	2.9	3.3	3.6
Add. Steel per pipe (kg)		72	81	102	109	131	138	159	166

NO SCALE

U.S. DEPARTMENT OF TRANSPORTATION
FEDERAL HIGHWAY ADMINISTRATION
FEDERAL LANDS HIGHWAY

METRIC STANDARD

CONCRETE HEADWALL/WINGWALL FOR MULTIPLE SKEW 1050 TO 2100 PIPE CULVERT

STANDARD APPROVED FOR USE 3/1996
REVISED: 5/1997 6/2005

STANDARD M601-8

05-Oct-2005 02:49 PM
F:\StanDraw\st60108.dgn [Metric]