STATE	PROJECT	SHEET NUMBER

COUPLING BANDS FOR METAL PIPE CULVERT 1/

CORRUGATION SIZE 2/ INCHES	ROUND PIPE DIAMETER INCHES	PIPE ARCH SPAN x RISE INCHES	MINIMUM BAND WIDTH (INCHES) ANNULAR CORRUGATED BANDS 3/	HELICALLY CORRUGATED BANDS 4/	SEMI-CORRUGATED BANDS 5/
1½ x ¼	underdrain 6/	-	10.5	7	10.5
2⅔ x ½	12 to 36	17 x 13 to 42 x 29	7	12	
	42 to 72	49 x 33 to 83 x 57	10.5	12	
	78 to 84	-	10.5	12	10.5
3 x 1	36 to 72	60 x 46 to 81 x 59	12	14	10.5
	78 to 144	87 x 64 to 142 x 91	12	14	10.5
5 x 1	36 to 72	60 x 46 to 81 x 59	20	22	
	78 to 144	87 x 64 to 142 x 91	20	22	

1/ Fabricate annular, helical and semi-corrugated type coupling bands from the same metal as the connecting pipe. Provide coupling bands not more than 3 nominal sheet thicknesses thinner than the thickness of the pipe to be connected, and no thinner than 0.052 inch for steel or 0.048 inch for aluminum. Fasten coupling bands with the following diameter of bolt:
⅜" for 18" round culvert (21" x 15" pipe arch) or less
½" for 21" round culvert (24" x 18" pipe arch) or more

2/ For helically corrugated pipe with rerolled ends, the nominal corrugations size refers to the dimension of the end corrugation in the pipe.

3/ Use annular corrugated bands with pipes having annular corrugations or with helical pipe having rerolled end to form annular corrugations. A 10.5 inch band is acceptable on pipe ends rerolled with 2⅔" x ½" corrugations. A 12 inch band is acceptable on pipe ends rerolled with 3" x 1" pipe corrugations.

4/ Use helical corrugated bands with pipes having helically corrugated ends.

5/ The minimum band widths shown for 3" x 1" and 5" x 1" corrugated sizes apply to 2⅔" x ½" corrugations on rerolled pipe ends.

6/ Smooth sleeve-type couplers and flat bands may be used for pipe diameters of 12" or less. Use a matching metal having a nominal thickness of not less than 0.040 inch for steel, or 0.036 inch for aluminum, or a plastic with an equivalent strength to metal.

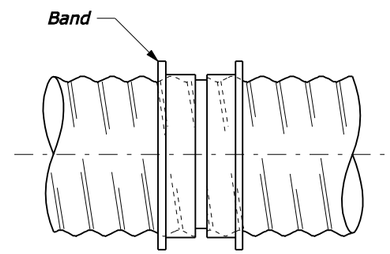

SLEEVE JOINT

Smoother sleeve with center stop.
Stab type joint

SMOOTH SLEEVE BAND

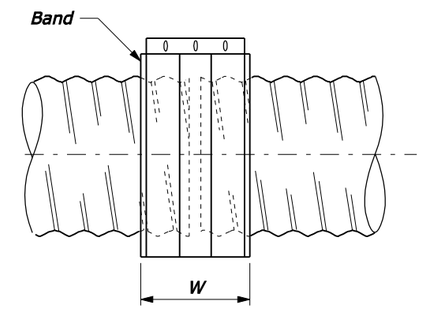

FLAT BAND

NOTE:

1. Watertight pipe joints are not required unless specified in the Special Contract Requirements.
2. Other types of coupling bands or fastening devices that comply with the joint performance criteria of AASHTO Standard specifications for Highway Bridges, Division II Section 26 may be used.

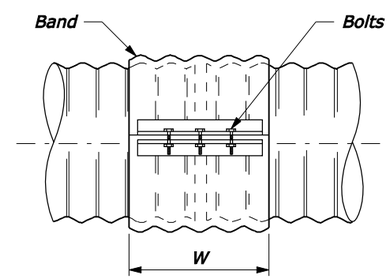

SIDE VIEW

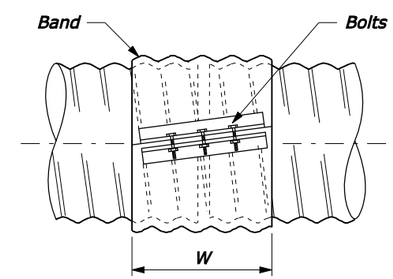

SIDE VIEW

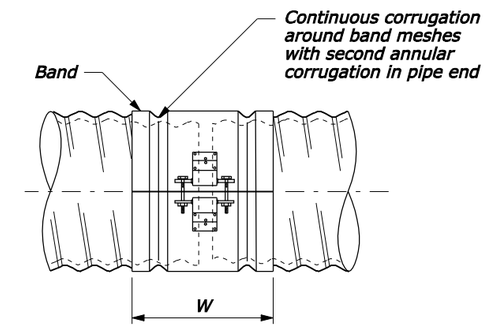

SIDE VIEW

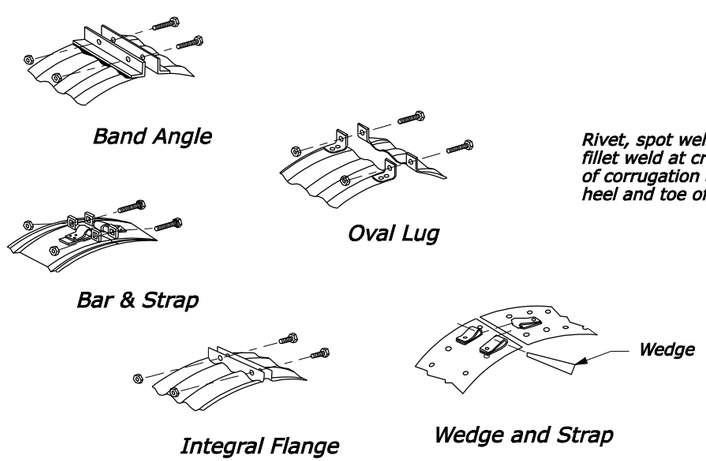

STANDARD BAND CONNECTIONS

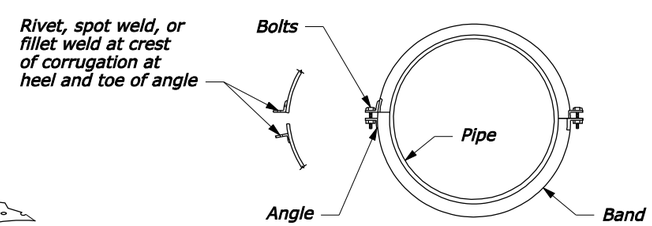

END VIEW

Second angle connection optional to 42" diameter, required above 42" diameter

ANNULAR BAND

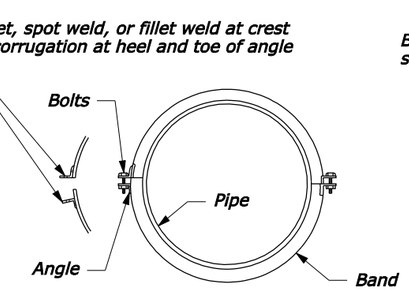

END VIEW

Second angle connection optional to 42" diameter, required above 42" diameter

HELICAL BAND

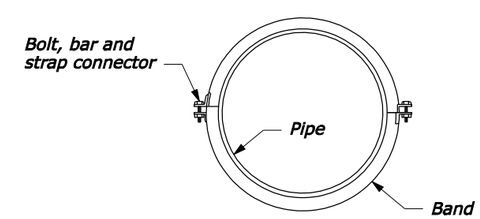

END VIEW

SEMI-CORRUGATED BAND

NO SCALE

U.S. DEPARTMENT OF TRANSPORTATION
FEDERAL HIGHWAY ADMINISTRATION
FEDERAL LANDS HIGHWAY

U.S. CUSTOMARY STANDARD

METAL PIPE CULVERT COUPLING BAND

STANDARD APPROVED FOR USE 12/1993
REVISED: 4/1994 6/2005

STANDARD 602-2

F:\StanDraw\st60202.dgn [US Customary] 27-Sep-2005 12:50 PM