STATE	PROJECT	SHEET NUMBER

COUPLING BANDS FOR METAL PIPE CULVERT 1/

CORRUGATION SIZE 2/	ROUND PIPE DIAMETER	PIPE ARCH SPAN x RISE	MINIMUM BAND WIDTH		
			ANNULAR CORRUGATED BANDS 3/	HELICALLY CORRUGATED BANDS 4/	SEMI-CORRUGATED BANDS 5/
38 x 6.5	underdrain 6/	-	265	180	265
68 x 13	300 to 900	430 x 330 to 1060 x 740	180	300	
	1050 to 1800	1240 x 840 to 2100 x 1450	265	300	
	1950 to 2100	-	265	300	265
75 x 25	900 to 1800	1520 x 1170 to 2050 x 1500	300	350	265
	1950 to 3600	2200 x 1620 to 3600 x 2320	300	350	265
125 x 25	900 to 1800	1520 x 1170 to 2050 x 1500	500	560	
	1950 to 3600	2200 x 1620 to 3600 x 2320	500	560	

1/ Fabricate annular, helical and semi-corrugated type coupling bands from the same metal as the connecting pipe. Provide coupling bands not more than 3 nominal sheet thicknesses thinner than the thickness of the pipe to be connected, and no thinner than 1.32 mm for steel or 1.2 mm for aluminum. Fasten coupling bands with the following diameter of bolt:
M10 for 450 round culvert (530 x 380 pipe arch) or less
M12 for 525 round culvert (610 x 460 pipe arch) or more

2/ For helically corrugated pipe with rerolled ends, the nominal corrugations size refers to the dimension of the end corrugation in the pipe.

3/ Use annular corrugated bands with pipes having annular corrugations or with helical pipe having rerolled end to form annular corrugations. A 265 mm band is acceptable on pipe ends rerolled with 68 x 13 corrugations. A 300 mm band is acceptable on pipe ends rerolled with 75 x 25 pipe corrugations.

4/ Use helical corrugated bands with pipes having helically corrugated ends.

5/ The minimum band widths shown for 75 x 25 and 125 x 25 corrugated sizes apply to 68 x 13 corrugations on rerolled pipe ends.

6/ Smooth sleeve-type couplers and flat bands may be used for pipe diameters of 300 or less. Use a matching metal having a nominal thickness of not less than 1.02 mm for steel, or 0.91 mm for aluminum, or a plastic with an equivalent strength to metal.

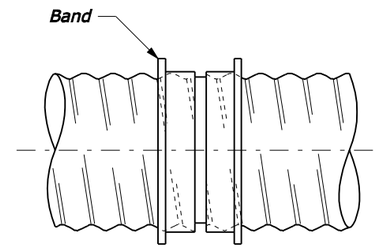

SLEEVE JOINT

Smoother sleeve with center stop.
Stab type joint

SMOOTH SLEEVE BAND

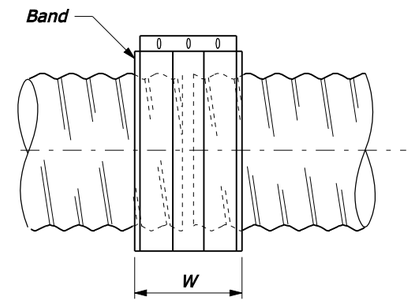

FLAT BAND

NOTE:

1. Watertight pipe joints are not required unless specified in the Special Contract Requirements.
2. Other types of coupling bands or fastening devices that comply with the joint performance criteria of AASHTO Standard specifications for Highway Bridges, Division II Section 26 may be used.
3. Dimensions without units are millimeters.

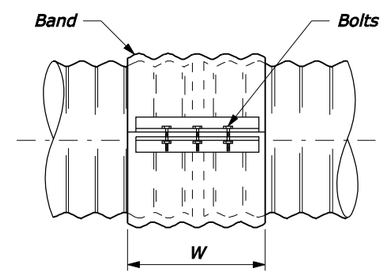

SIDE VIEW

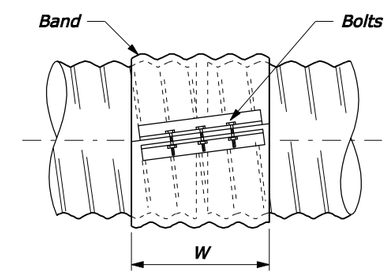

SIDE VIEW

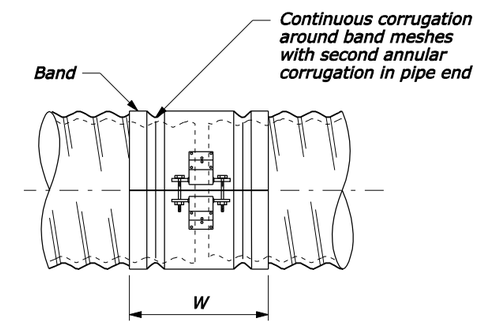

SIDE VIEW

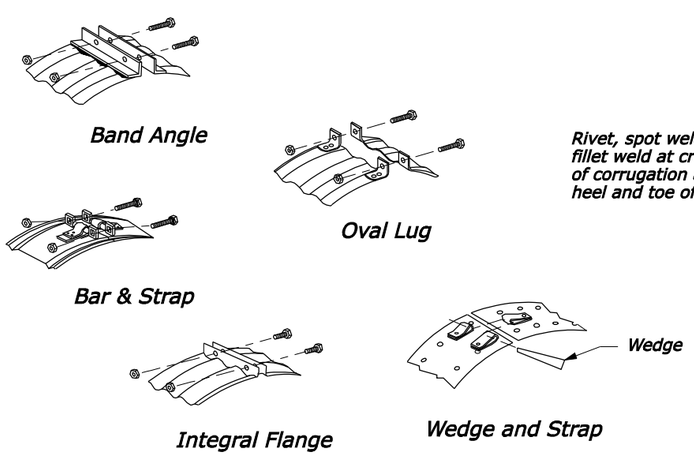

STANDARD BAND CONNECTIONS

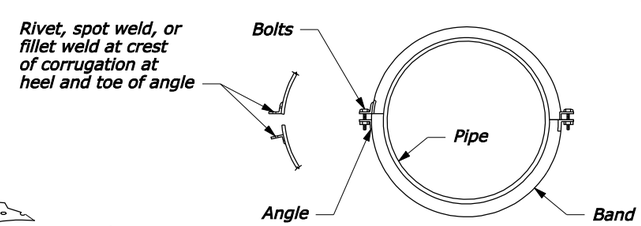

END VIEW

Second angle connection optional to 1050 diameter, required above 1050 diameter

ANNULAR BAND

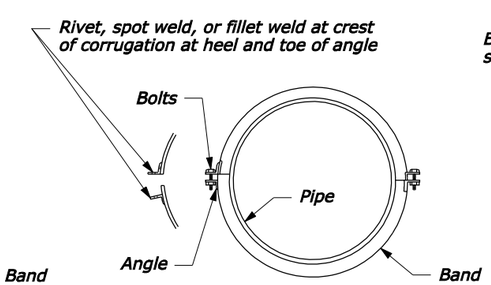

END VIEW

Second angle connection optional to 1050 diameter, required above 1050 diameter

HELICAL BAND

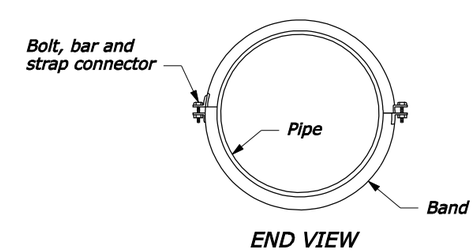

END VIEW

SEMI-CORRUGATED BAND

NO SCALE

U.S. DEPARTMENT OF TRANSPORTATION
FEDERAL HIGHWAY ADMINISTRATION
FEDERAL LANDS HIGHWAY

METRIC STANDARD

METAL PIPE CULVERT COUPLING BAND

STANDARD APPROVED FOR USE 3/1996
REVISED: 8/1997 6/2005

STANDARD M602-2

29-Sep-2005 04:28 PM
F:\StanDraw\st60202.dgn [Metric]