STATE	PROJECT	SHEET NUMBER

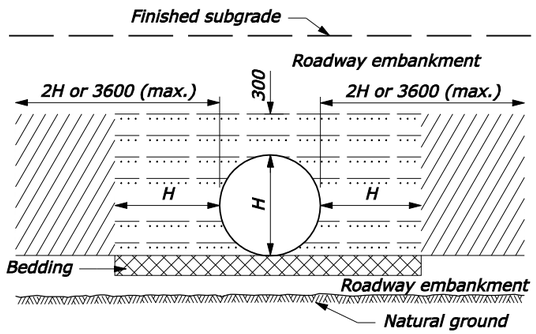

ABOVE NATURAL GROUND

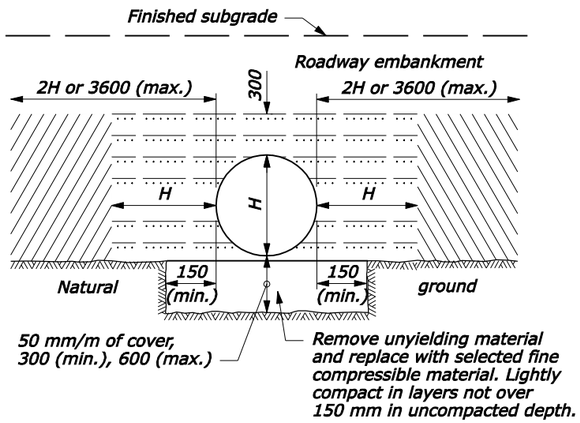

ON UNYIELDING MATERIAL

BEDDING DEPTH	
PIPE SIZE (H)	DEPTH
300 to 1350	100
> 1350	150

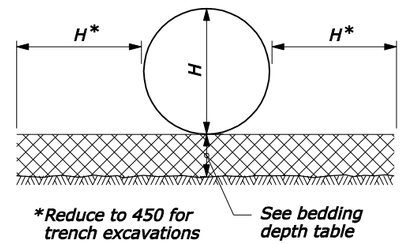

PIPE BEDDING

NOTE:

1. When directed, camber pipe culverts upward from a chord through the inlet and outlet inverts an ordinate amount equal to 1% of the pipe length. Develop camber on a parabolic curve. If the midpoint elevation on the parabolic curve as designed exceeds the elevation of the inlet invert, reduce the amount of camber or increase the pipe culvert gradient.
2. H equals the diameter of all round pipe culverts or the rise dimension of all pipe arch culverts.
3. Dimensions without units are millimeters.

MINIMUM SPACING	
DIAMETER or SPAN	SPACING
UP to 1200	610
1200 and UP	Half diameter or span OR 900 whichever is less

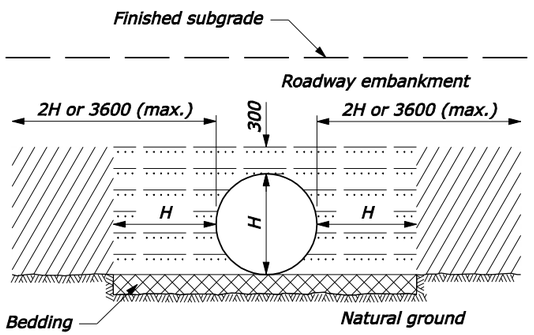

ON NATURAL GROUND

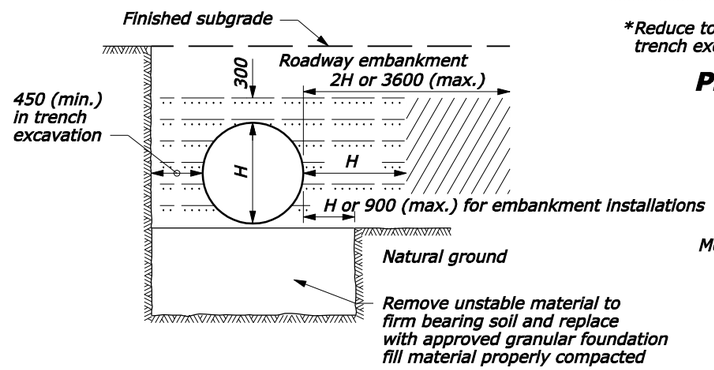

ON UNSTABLE MATERIAL

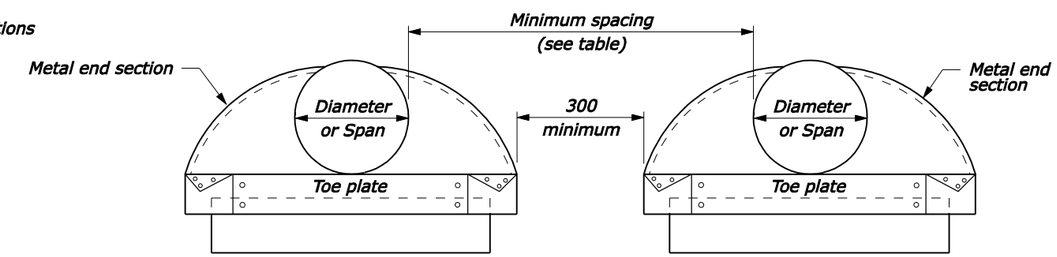

ELEVATION

MULTIPLE PIPE INSTALLATION

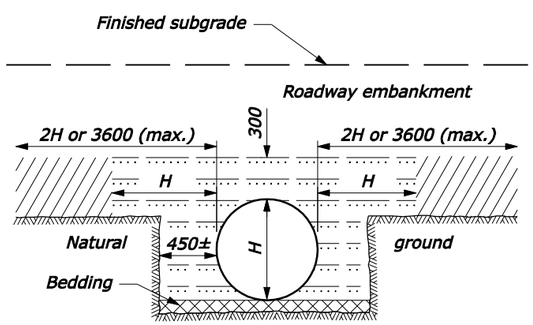

ABOVE AND BELOW NATURAL GROUND

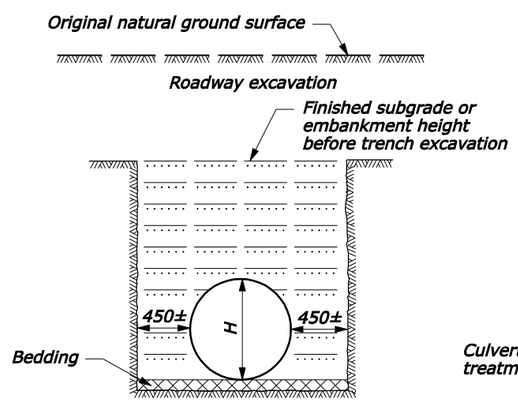

BELOW NATURAL GROUND OR TRENCH EXCAVATION IN EMBANKMENT

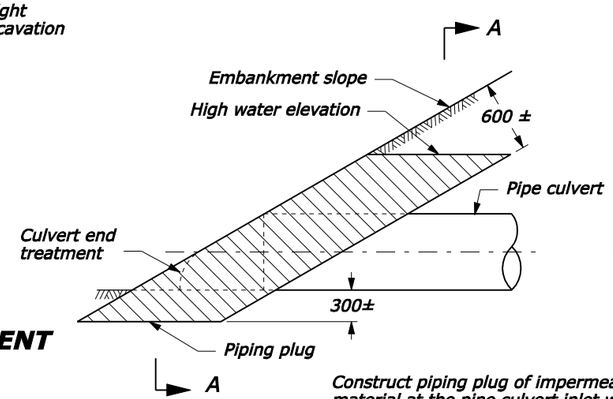

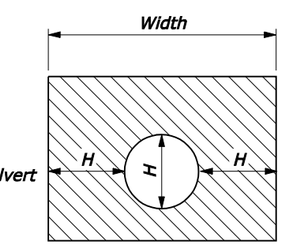

SECTION A-A

Construct piping plug of impermeable backfill material at the pipe culvert inlet where granular material is used for backfill. Width may be adjusted to tie into impervious material.

PIPING PLUG

NO SCALE

Bedding material (uncompacted)

Embankment material placed in layers not exceeding 150 mm compacted depth.

Compacted backfill material placed in layers not exceeding 150 mm compacted depth meeting the following:
Metal Pipe: Maximum particle size = 75 mm
Soil classification: A-1, A-2, or A-3
Plastic Pipe: Maximum particle size: 37.5 mm
Soil classification: A-1, A-2-4, A-2-5, or A-3
Or lean concrete backfill in accordance with Section 614.

U.S. DEPARTMENT OF TRANSPORTATION
FEDERAL HIGHWAY ADMINISTRATION
FEDERAL LANDS HIGHWAY

METRIC STANDARD

METAL AND PLASTIC PIPE CULVERT BEDDING

STANDARD APPROVED FOR USE 3/1996
REVISED: 12/1998 6/2005

STANDARD
M602-3

03-Oct-2005 06:41 AM
F:\StanDraw\st60203.dgn [Metric]