STATE	PROJECT	SHEET NUMBER

CONCRETE ROUND PIPE CULVERT

FILL HEIGHT AND PIPE CLASS TABLE

PIPE SIZE DIAMETER	MINIMUM COVER	EMBANKMENT CLASS II	EMBANKMENT CLASS III	EMBANKMENT CLASS IV	EMBANKMENT CLASS V	TRENCH CLASS II	TRENCH CLASS III	TRENCH CLASS IV	TRENCH CLASS V
		MAXIMUM FILL HEIGHT ABOVE TOP OF PIPE IN METERS							
300	300	3.0	3.0	4.5	7.0	5.5	5.5	8.0	4.0
450	300	3.0	3.0	7.5	12.0	4.0	4.0	9.0	13.5
600	300	3.0	3.0	4.5	9.0	4.5	4.5	6.5	12.0
750	300	2.5	4.0	4.5	10.5	4.0	5.0	6.0	14.0
900	300	2.5	2.5	6.0	12.5	3.0	4.0	8.0	17.0
1200	300	3.5	4.0	8.0	13.5	4.5	5.0	9.0	15.0
1500	300	4.5	5.0	8.5	13.5	4.5	6.0	9.5	15.0
1800	300	4.0	5.0	9.0	12.5	4.5	6.0	10.5	15.0
2100	300	4.0	5.5	9.0		4.5	7.0	11.0	
2400	300	4.0	6.0			4.5	7.0		
2700	350	4.5	6.0			5.5	8.0		

LEGEND:

- Bedding material (uncompacted).
- Embankment material placed in layers not exceeding 150 compacted depth.
- Compacted backfill material placed in layers not exceeding 150 compacted depth meeting the following:
  - Maximum particle size = 75
  - Soil classification; A-1, A-2 or A-3
  - Or, lean concrete backfill in accordance with Section 614.
- Impermeable backfill material.

NOTE:

1. When directed, camber pipe culverts upwards from a chord through the inlet and outlet inverts an ordinate amount equal to 1% of the pipe length. Develop camber on a parabolic curve. If the midpoint elevation on the parabolic curve as designed exceeds the elevation of the inlet invert, reduce the amount of camber or increase the pipe culvert gradient.
2. Measure minimum cover from the top of the pipe culvert to the subgrade for flexible pavements, and to the top of the pavement for rigid pavements. Measure maximum fill height from the top of the pipe to the top of the pavement for both flexible and rigid pavements.
3. Pipe compaction limits shown are for pipe installation in an embankment. For pipe installation in a trench, the compaction limits shall be the walls of the trench.
4. Where unyielding or unstable material is encountered, install the pipe culvert according to the limits of pipe compaction shown on Standard M602-3.
5. Maximum fill heights for pipe culvert installations may be increased on approval of site-specific structural pipe designs meeting the criteria of AASHTO Standard Specifications for Highway bridges.
6. Dimensions without units are millimeters.

BEDDING DEPTH	
PIPE SIZE (H)	DEPTH
300 TO 1350	100
> 1350	150

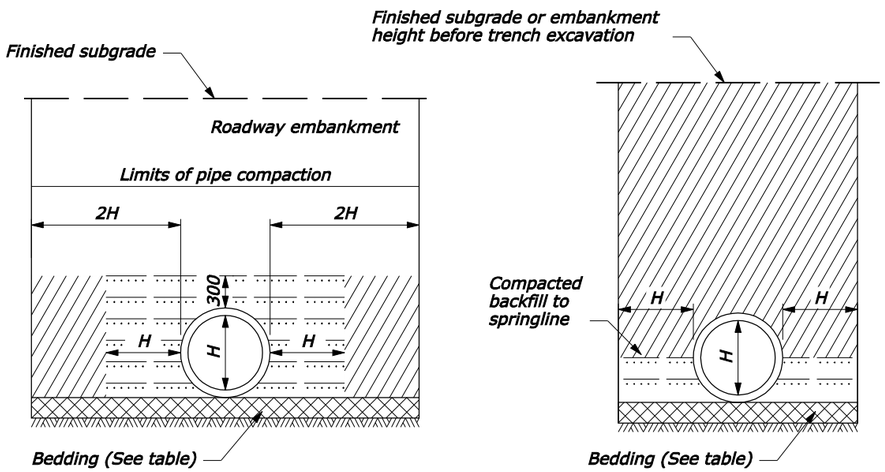

EMBANKMENT INSTALLATION **TRENCH INSTALLATION**

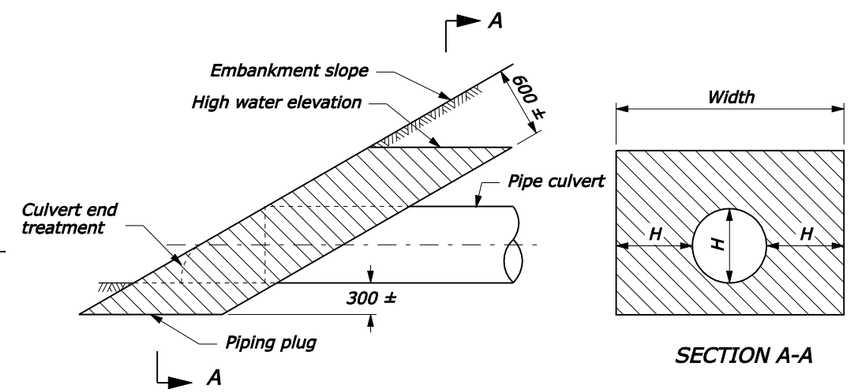

SECTION A-A

Construct a piping plug of impermeable backfill material at the pipe inlet where granular material is used for backfill. Width may be adjusted to tie into impervious material.

PIPING PLUG

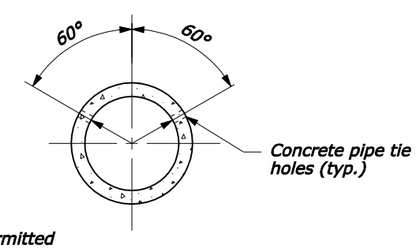

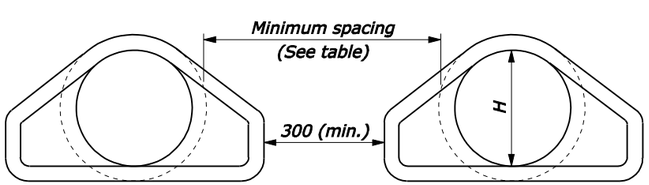

MULTIPLE ROUND PIPE INSTALLATION

MINIMUM SPACING		
DIAMETER	EMBANKMENT	TRENCH
300 - 900	380	2H
900 - 2400	0.5H	1830
OVER 2400	1220	1830

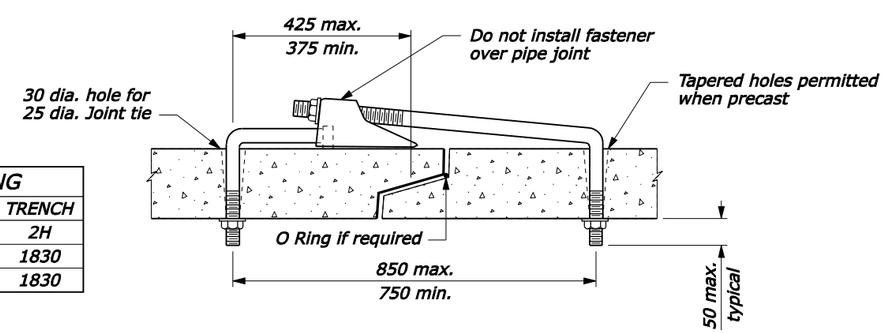

SUPPLEMENTAL CONCRETE PIPE TIE

NO SCALE

U.S. DEPARTMENT OF TRANSPORTATION
FEDERAL HIGHWAY ADMINISTRATION
FEDERAL LANDS HIGHWAY

METRIC STANDARD

CONCRETE PIPE CULVERT INSTALLATION

STANDARD APPROVED FOR USE 3/1996
REVISED: 6/2005
DRAFT: 9/2005

STANDARD M602-7

27-Sep-2005 01:45 PM
F:\StanDraw\st60207.dgn [Metric]