STATE	PROJECT	SHEET NUMBER

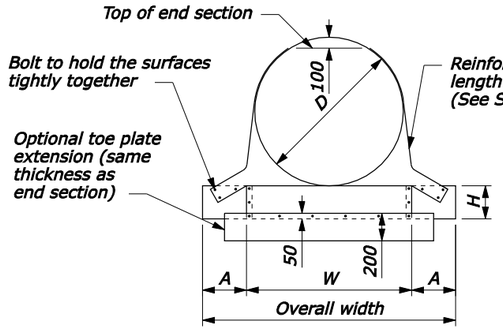

FRONT VIEW
ROUND PIPE CULVERT

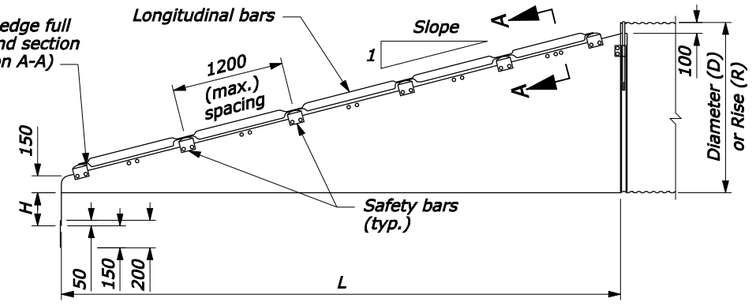

ELEVATION
CROSS DRAINAGE END SECTION

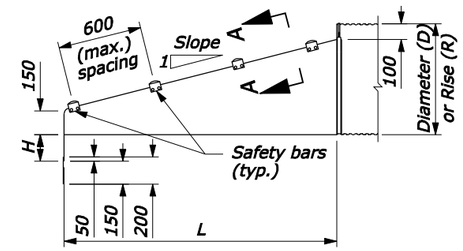

ELEVATION
PARALLEL DRAINAGE END SECTION

NOTE:

1. Use end sections on 1V:4H to 1V:6H slopes only. Use toe plate extension where shown on the plans.
2. Fabricate safety and longitudinal bars from steel pipe conforming to ASTM A53 schedule 40 specifications. Galvanize bars hot dipped after fabrication.
3. A longitudinal bar is required for cross drainage end sections when the span is greater than 750 mm. Use additional longitudinal bars if spacing exceeds 750 mm on larger end sections.
4. Safety and longitudinal bars are not required on 750 mm and smaller cross drainage end sections.
5. Safety bars are not required on 450 mm and smaller parallel drainage end sections.
6. 450 mm diameter sleeves have a thickness of 2.01 mm, all others are 2.77 mm.
7. Dimensions without units are millimeters.

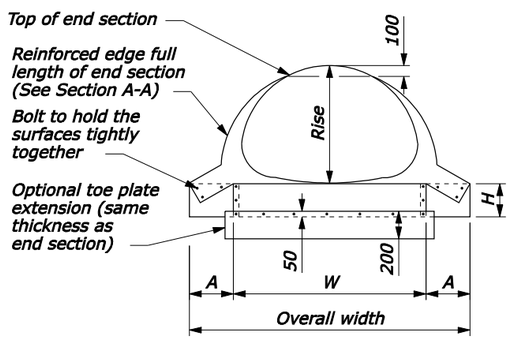

FRONT VIEW
PIPE ARCH CULVERT

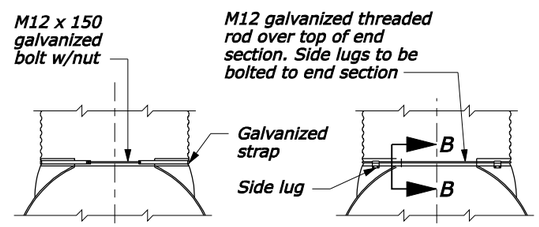

FOR METAL ROUND PIPES 375 THRU 600
TYPE #1

FOR METAL ROUND PIPES 750 AND LARGER. FOR PIPE ARCHES 525 X 375 AND LARGER
TYPE #2

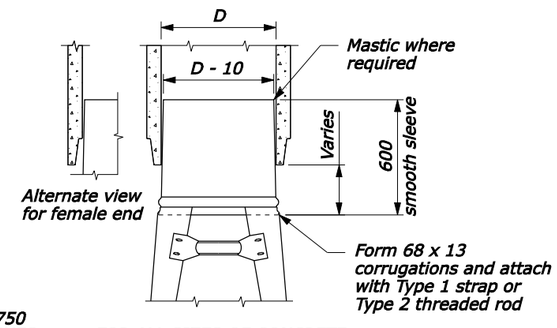

FOR ALL SIZES OF CONCRETE ROUND OR PIPE ARCHES
TYPE #3

CONNECTOR DETAILS

METAL END SECTIONS FOR ROUND PIPE CULVERT							
PIPE SIZE Ø	METAL THICK (MIN.)	DIMENSIONS					
		A	H	W	OVERALL WIDTH	L	
						Slope=4	Slope=6
450	1.63	200	150	600	1000	800	1200
600	1.63	200	150	750	1150	1400	2100
750	2.77	300	225	900	1500	2000	3000
900	2.77	300	225	1050	1650	2600	3900
1050	2.77	400	300	1200	2000	3200	4800
1200	2.77	400	300	1350	2150	3800	5700
1350	2.77	400	300	1500	2300	4400	6600
1500	2.77	400	300	1650	2450	5000	7500

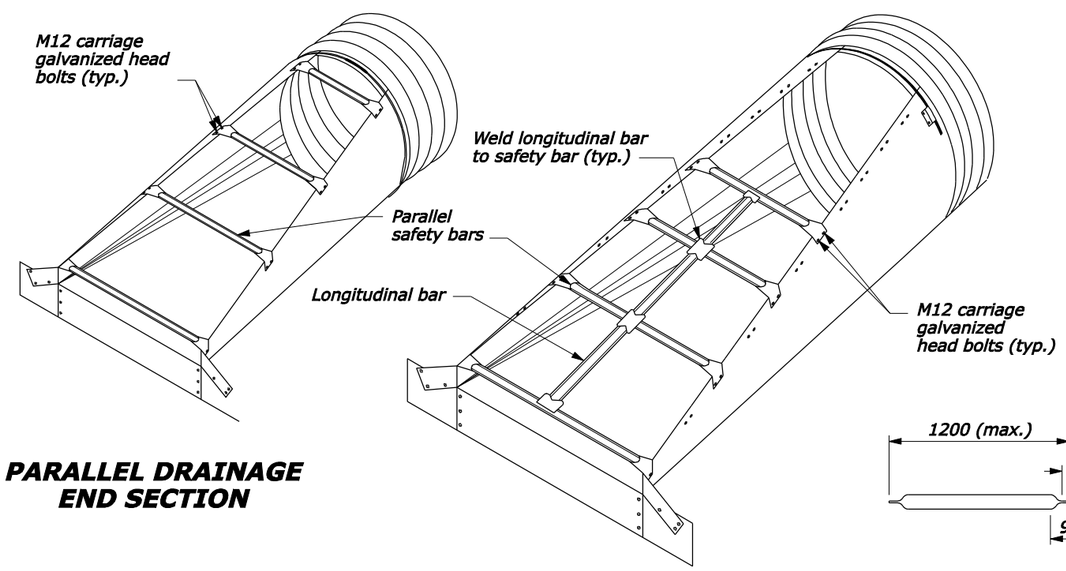

PARALLEL DRAINAGE END SECTION

CROSS DRAINAGE END SECTION

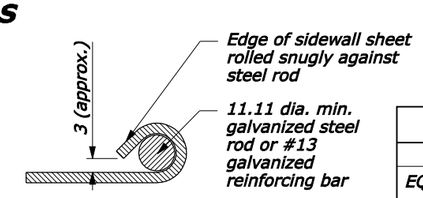

SECTION A-A

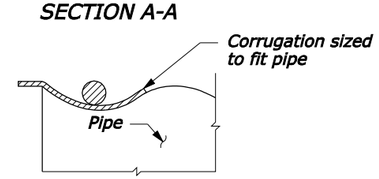

SECTION B-B

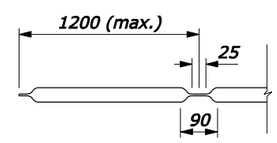

LONGITUDINAL DRAINAGE BAR

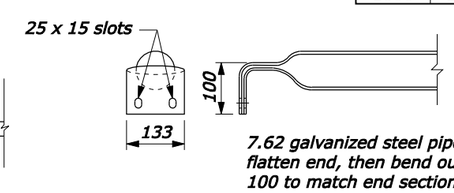

PARALLEL BARS

SAFETY BAR DETAILS

METAL END SECTIONS FOR PIPE ARCH CULVERT									
PIPE SIZE			METAL THICK (MIN.)	DIMENSIONS					
EQUIV. Ø	SPAN	RISE		A	H	W	OVERALL WIDTH	L	
								Slope=4	Slope=6
450	525	375	1.63	200	150	675	1075	500	750
600	700	500	1.63	200	150	850	1250	1000	1500
750	875	600	2.77	300	225	1025	1625	1400	2100
900	1050	725	2.77	300	225	1200	1800	1900	2850
1050	1225	825	2.77	400	300	1375	2175	2300	3450
1200	1425	950	2.77	400	300	1575	2375	2800	4200
1350	1600	1075	2.77	400	300	1750	2550	3300	4950
1500	1775	1175	2.77	400	300	1925	2725	3700	5550
1800	2075	1425	2.77	400	300	2225	3025	4700	7050

NO SCALE

U.S. DEPARTMENT OF TRANSPORTATION
FEDERAL HIGHWAY ADMINISTRATION
FEDERAL LANDS HIGHWAY

METRIC STANDARD

METAL END SECTIONS WITH SAFETY BARS

STANDARD APPROVED FOR USE 3/1996
REVISED: 5/1997 6/2005

STANDARD
M602-9

F:\StanDraw\st60209.dgn [Metric] 04-Oct-2005 01:31 PM