STATE	PROJECT	SHEET NUMBER

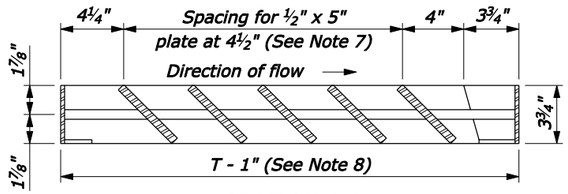

SECTION A-A

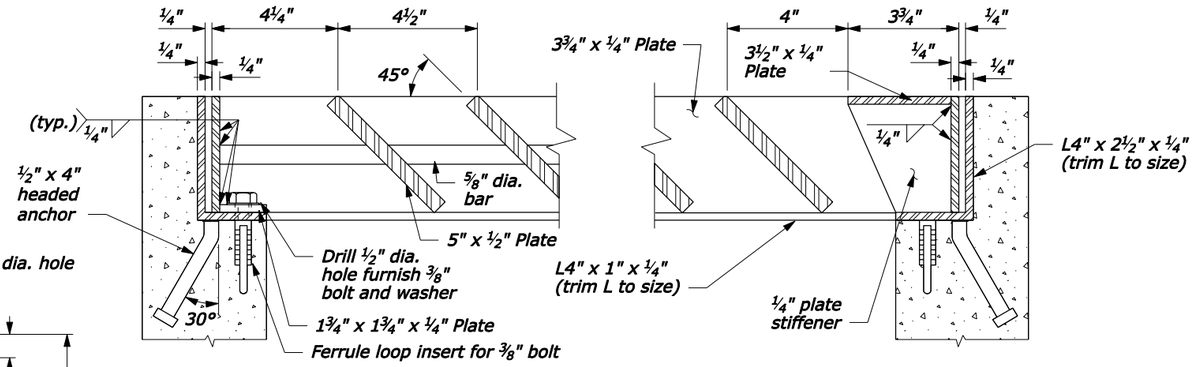

SECTION B-B

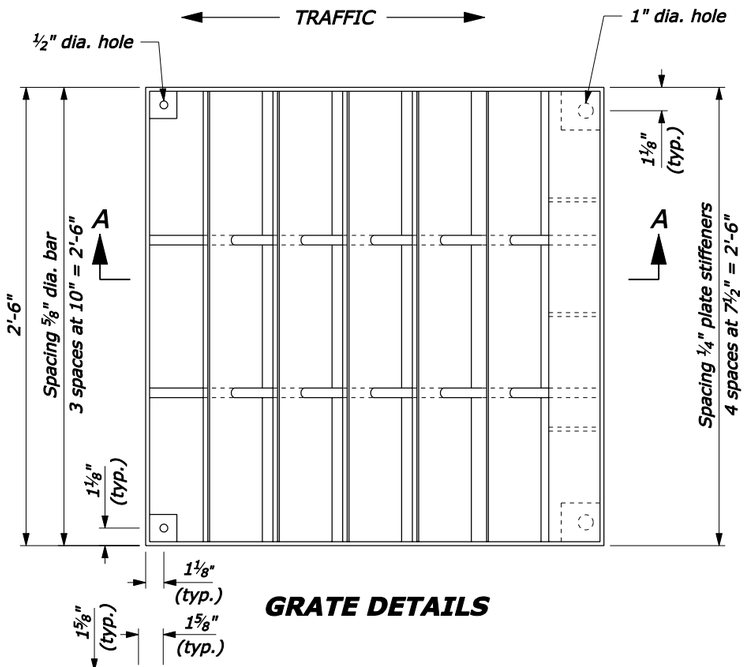

GRATE DETAILS

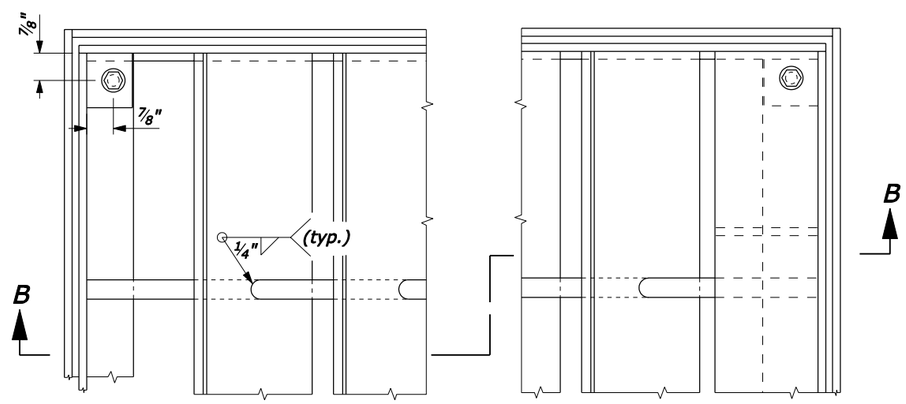

FRAME AND GRATE DETAILS

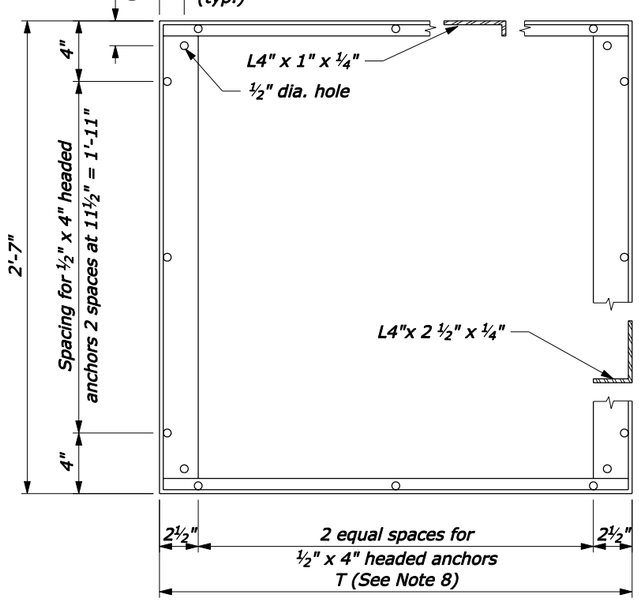

FRAME DETAIL

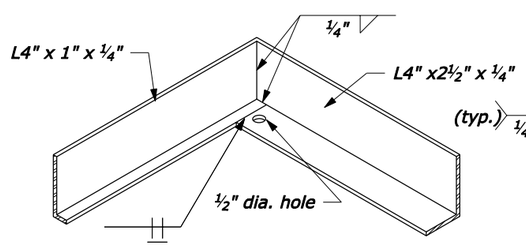

FRAME CORNER DETAIL

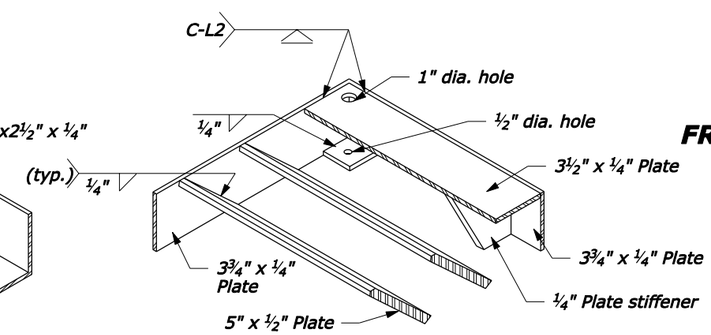

GRATE CORNER DETAIL

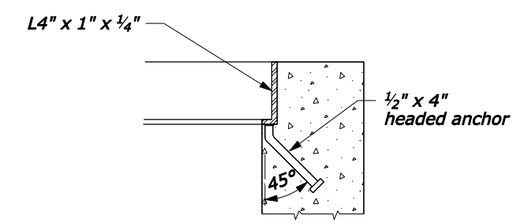

FRAME ANCHOR DETAIL

NOTE:

1. STRUCTURAL STEEL: AASHTO M 183 (ASTM A 36M).
2. BOLTS & WASHERS: ASTM A 307, Galvanized.
3. THREADED CONCRETE ANCHORS: Ferrule loop inserts for ⅜" bolt or approved equal.
4. HEADED CONCRETE ANCHORS: Weld to frame with a full penetration butt weld.
5. WELDING: Weld in conformance with the Standard Specifications. Unless otherwise indicated seal weld all joints with a minimum size fillet weld, basedon material thickness. Grind smooth all contact surfaces. FINISH: Galvanized after fabrication.
6. Estimated weight, frame and grate (2'-6" x 2'-6") 215 lbs. Increase or decrease weight by 28 lbs for each 4½" increment.
7. Number of plates varies according to pipe diameter. See Standard 604-1.
8. See Standard 604-1 for dimensions of T.

NO SCALE

U.S. DEPARTMENT OF TRANSPORTATION
FEDERAL HIGHWAY ADMINISTRATION
FEDERAL LANDS HIGHWAY

U.S. CUSTOMARY STANDARD

METAL FRAME AND GRATE TYPE A

STANDARD APPROVED FOR USE 6/2005

REVISED:

STANDARD 604-2

F:\StanDraw\st60402.dgn [US Customary] 20-Jun-2005 07:12 AM