STATE	PROJECT	SHEET NUMBER

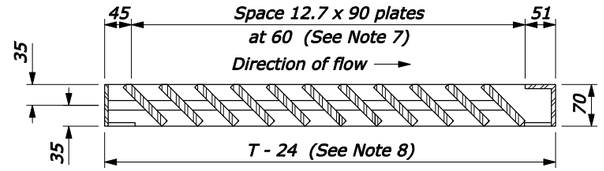

SECTION A-A

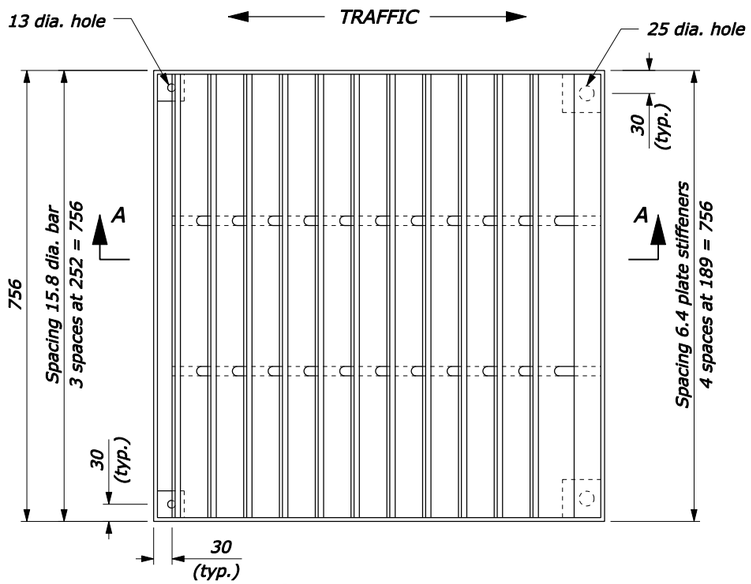

GRATE DETAILS

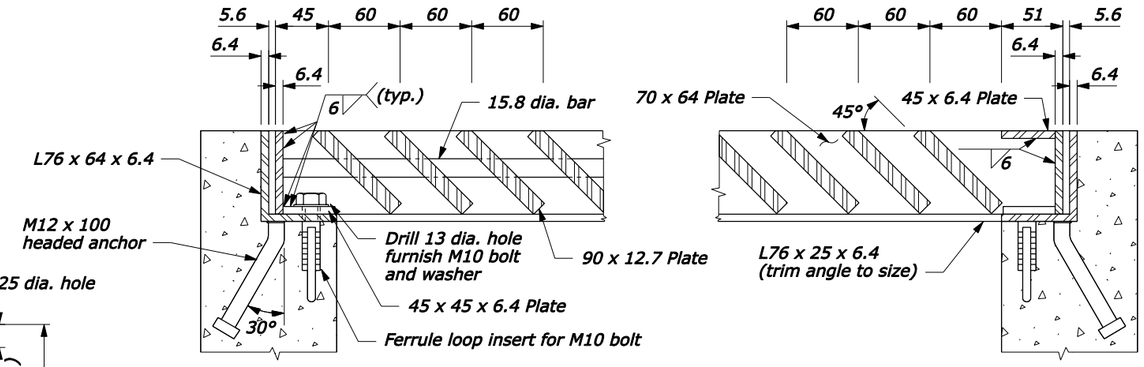

SECTION B-B

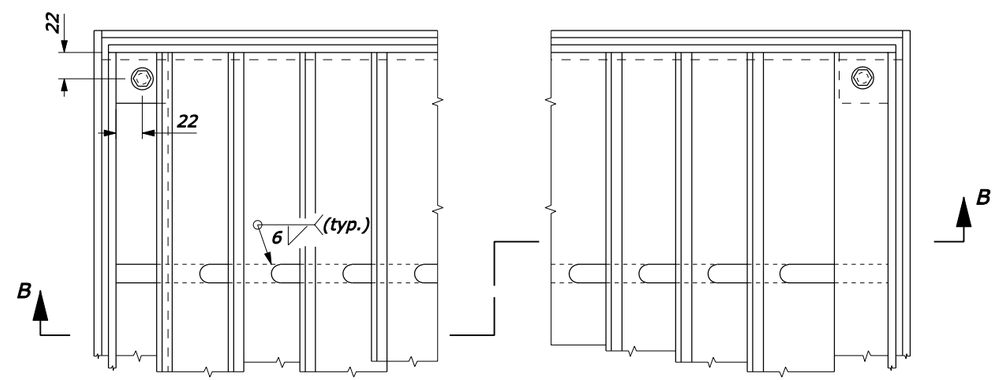

FRAME AND GRATE DETAILS

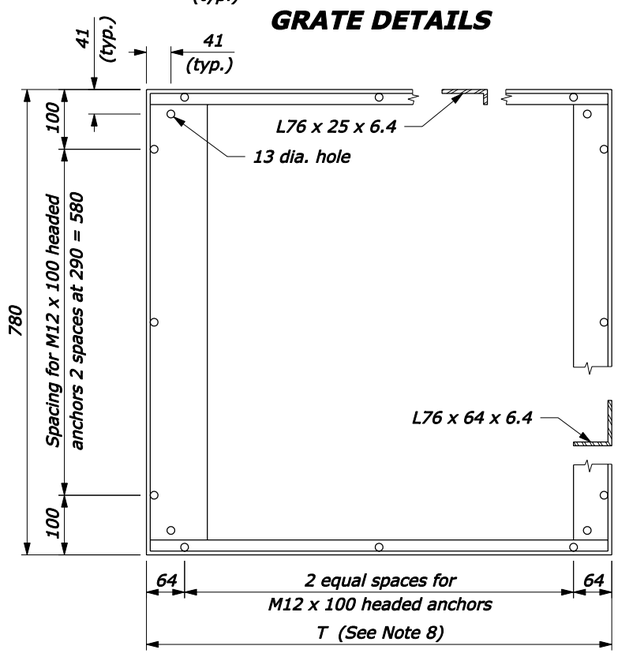

FRAME DETAIL

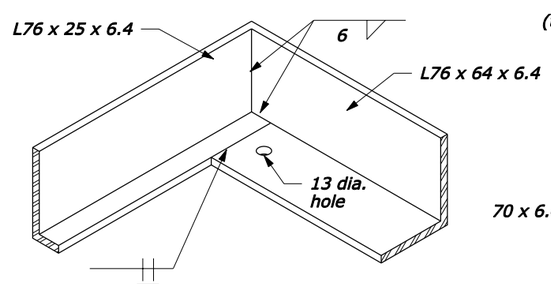

FRAME CORNER DETAIL

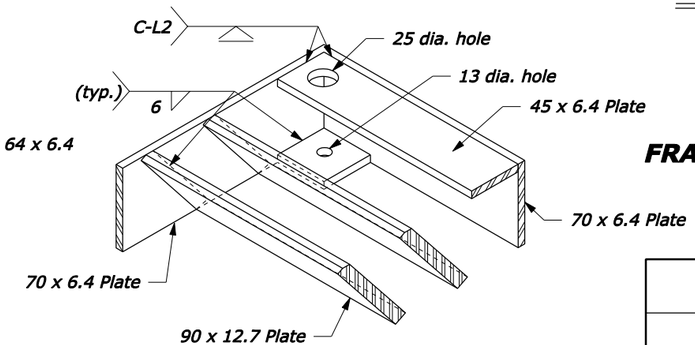

GRATE CORNER DETAIL

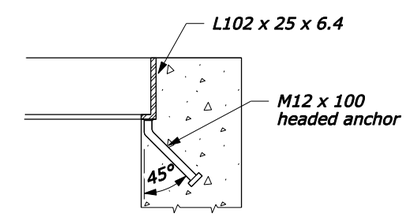

FRAME ANCHOR DETAIL

NO SCALE

NOTE:

1. STRUCTURAL STEEL: AASHTO M 183 (ASTM A 36M).
2. BOLTS & WASHERS: ASTM A 307, Galvanized.
3. THREADED CONCRETE ANCHORS: Ferrule loop inserts for M10 bolt or approved equal.
4. HEADED CONCRETE ANCHORS: Weld to frame with a full penetration butt weld.
5. WELDING: Weld in conformance with the Standard Specifications. Unless otherwise indicated seal weld all joints with a minimum size fillet weld, based on material thickness. Grind smooth all contact surfaces. FINISH: Galvanized after fabrication.
6. Estimated weight, frame and grate (756 x 756 mm) 108 kg. Increase or decrease weight by 8.6 kg for each 60 mm increment.
7. Number of plates varies according to pipe diameter. See Standard M604-1.
8. See Standard M604-1 for dimensions of T.
9. Furnish hardware in the metric sizes shown. Equivalent US Customary sizes may be used when metric sizes are unavailable.
10. Dimensions without units are millimeters.

U.S. DEPARTMENT OF TRANSPORTATION
FEDERAL HIGHWAY ADMINISTRATION
FEDERAL LANDS HIGHWAY

METRIC STANDARD

METAL FRAME AND GRATE TYPE B

STANDARD APPROVED FOR USE 3/1996
REVISED: 8/1997 6/2005

STANDARD
M604-3

20-Jun-2005 07:44 AM
F:\StanDraw\st604003.dgn [Metric]