STATE	PROJECT	SHEET NUMBER

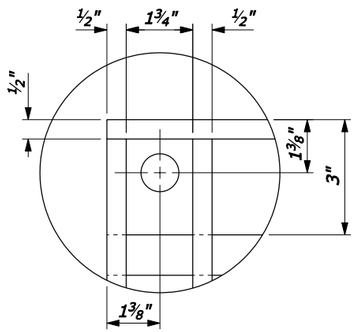

DETAIL B

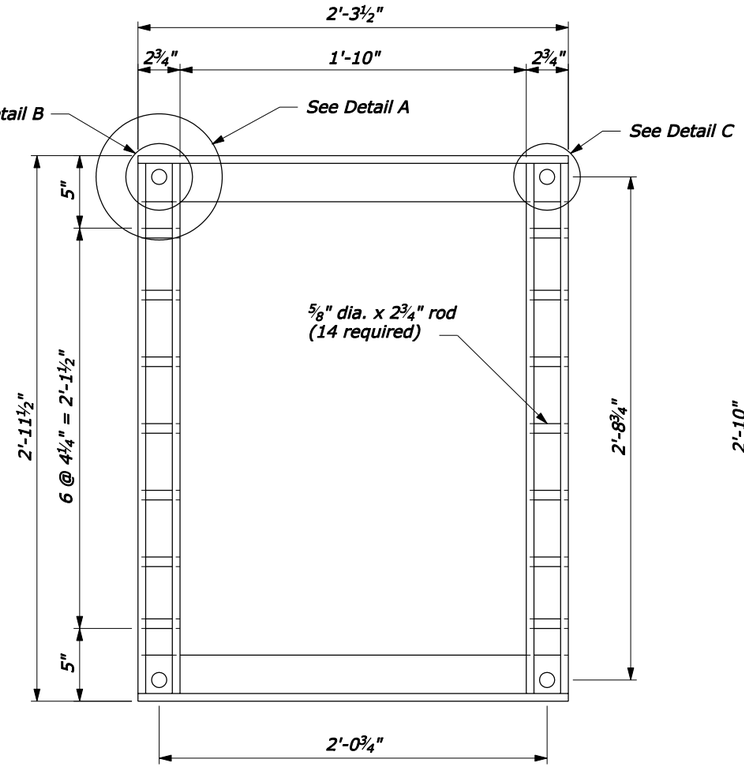

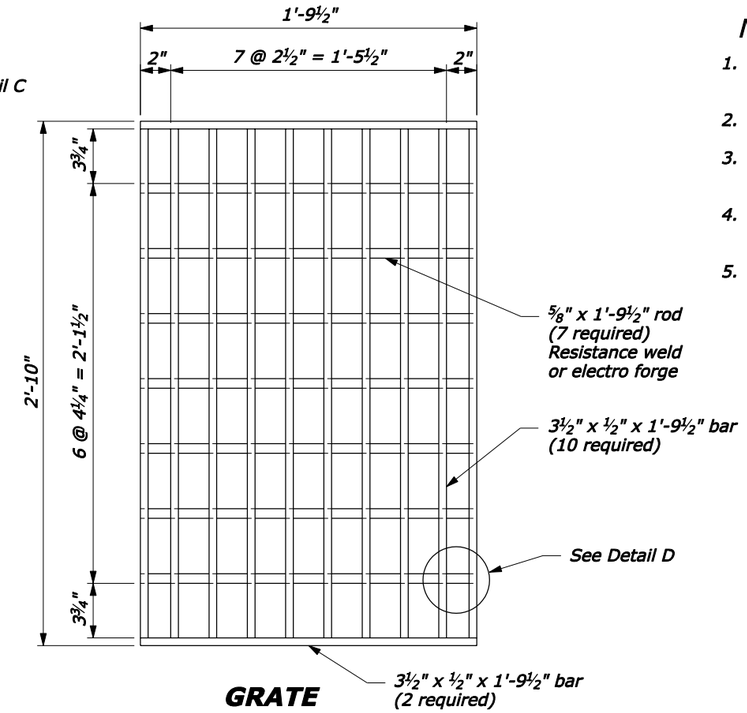

GRATE

NOTE:

1. Hot dip galvanize all metal parts for frame and grate after fabrication.
2. Fabricate frame and grate from structural steel.
3. Furnish four ¾" x 8" anchor bolts with nuts to attach frame to inlet.
4. Cut holes 3½" x ½" bar as required to place ⅝ inch diameter rods.
5. Spot weld ⅝ inch diameter rods for frame and grate to 3½" x ½" bars.

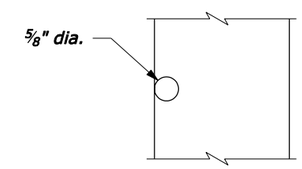

SECTION A-A

GRATE FRAME

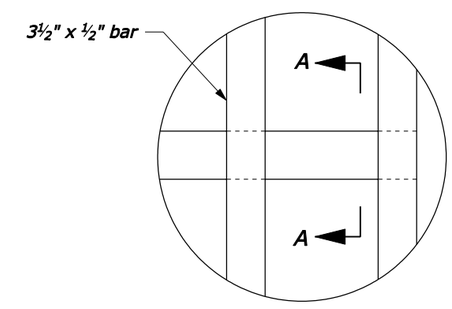

DETAIL D

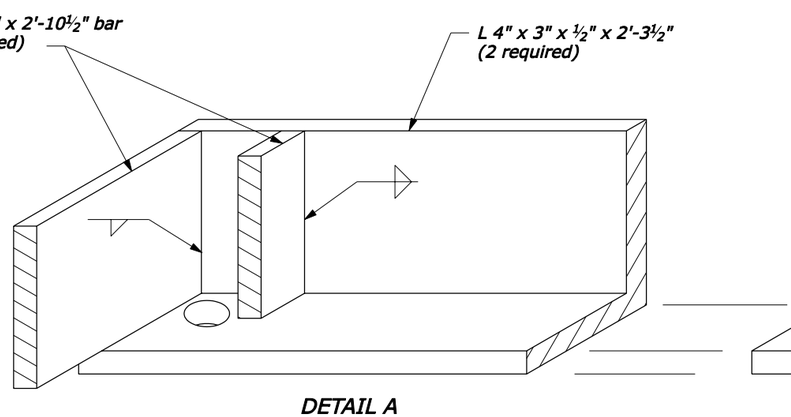

DETAIL A
(OBLIQUE)

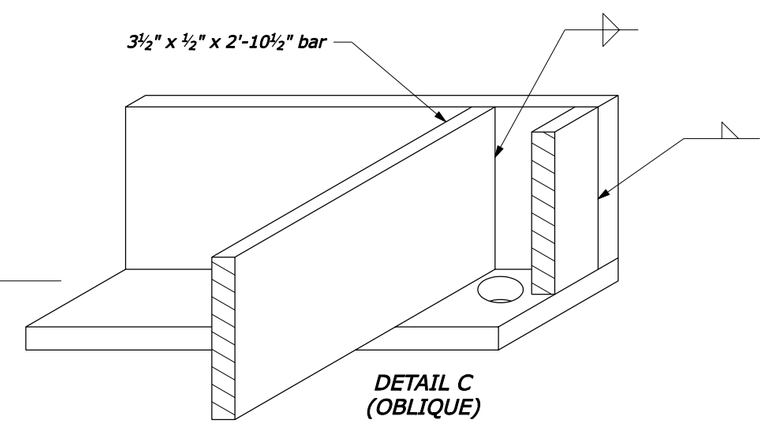

DETAIL C
(OBLIQUE)

NO SCALE

U.S. DEPARTMENT OF TRANSPORTATION
FEDERAL HIGHWAY ADMINISTRATION
FEDERAL LANDS HIGHWAY

U.S. CUSTOMARY STANDARD

FRAME AND GRATE
TYPE 5A

STANDARD APPROVED FOR USE 6/2005
REVISED:

STANDARD
604-6

F:\StanDraw\st50406.dgn [US Customary] 20-Jun-2005 08:22 AM