STATE	PROJECT	SHEET NUMBER

NOTE:

1. Construct inlets parallel to the roadway centerline and grade. For pipes on skew, adapt inlets as directed by the CO.
2. For frames and gratings minor variations in design and dimensions are permitted to allow manufacturers standards.
3. Dimensions without units are millimeters

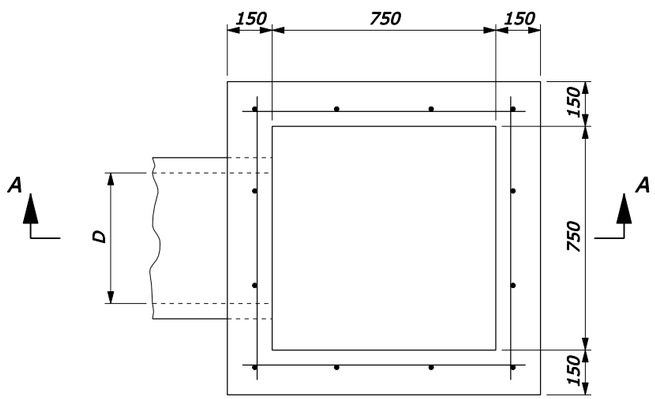

PLAN

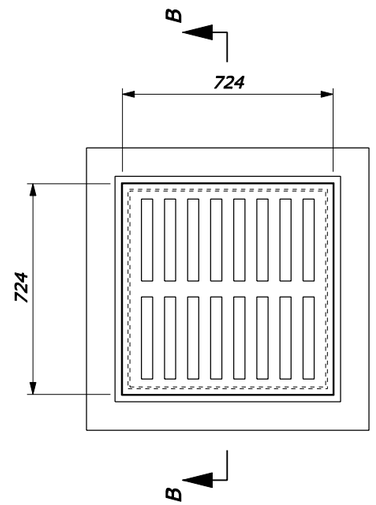

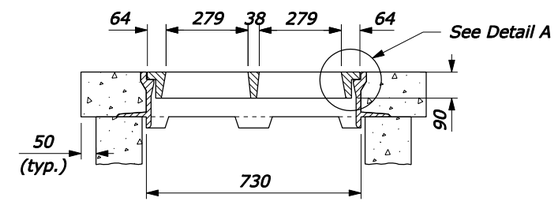

SECTION B-B

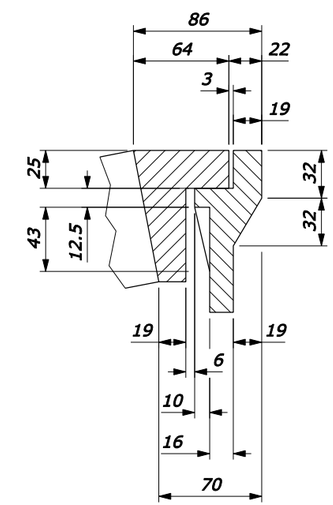

DETAIL A

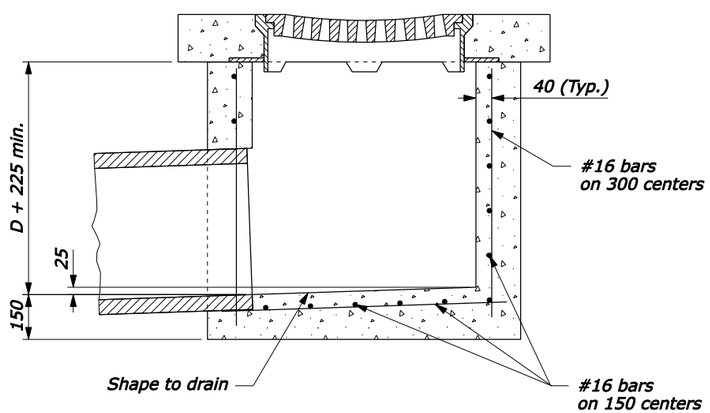

SECTION A-A

TYPE 6B INLET

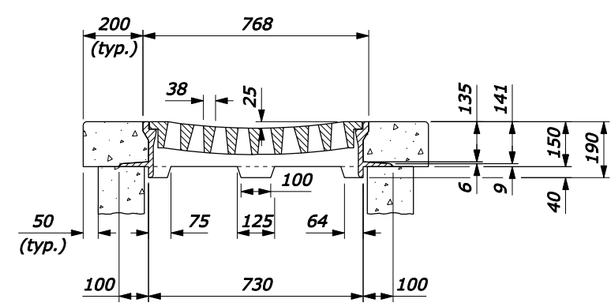

Gray Iron Castings, AASHTO M 105

METAL FRAMES AND GRATINGS
TYPE 6B

NO SCALE

U.S. DEPARTMENT OF TRANSPORTATION
FEDERAL HIGHWAY ADMINISTRATION
FEDERAL LANDS HIGHWAY

METRIC STANDARD

INLET
TYPE 6B

STANDARD APPROVED FOR USE 3/1996
REVISED: 5/1997 6/2005

STANDARD
M604-7

20-Jun-2005 08:26 AM
F:\StanDraw\st60407.dgn [Metric]