STATE	PROJECT	SHEET NUMBER

NOTE:

1. Frame and cover dimensions may vary slightly to allow manufacturer's standards.
2. MASS: (Approximate, cast iron)
   Frame - 86 ± 4 lb
   Cover - 83 ± 4 lb
3. All reinforcing bars are #5 placed a minimum 1½ inch clear from face of concrete. In floors, place bars on 6 inch centers each way. In walls, place horizontal bars on 6 inch centers and vertical bars on 12 inch centers.

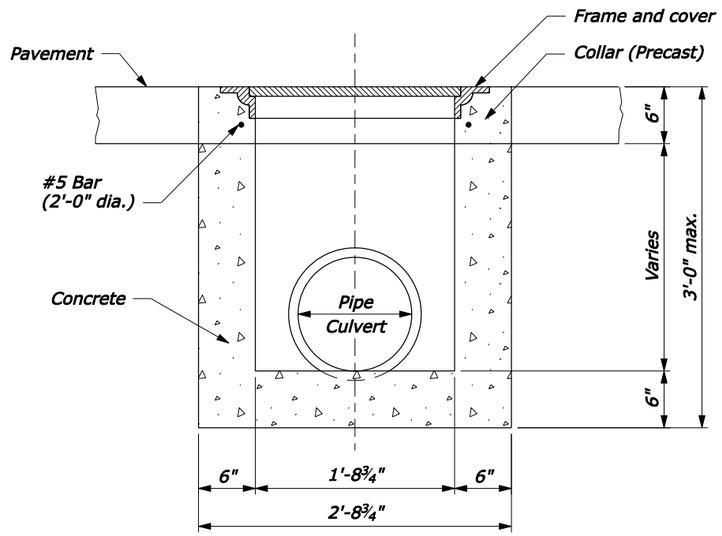

SECTION A-A

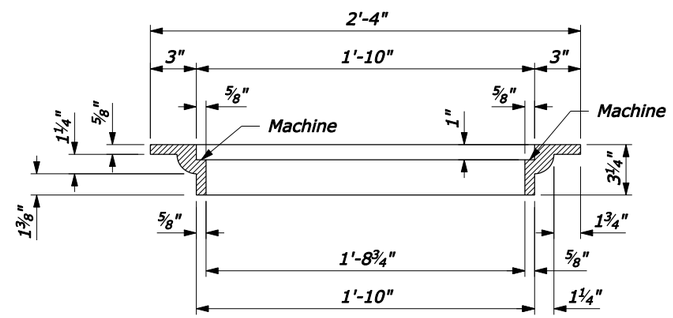

SECTION B-B

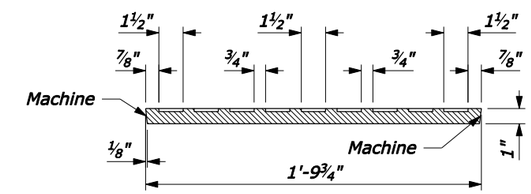

SECTION C-C

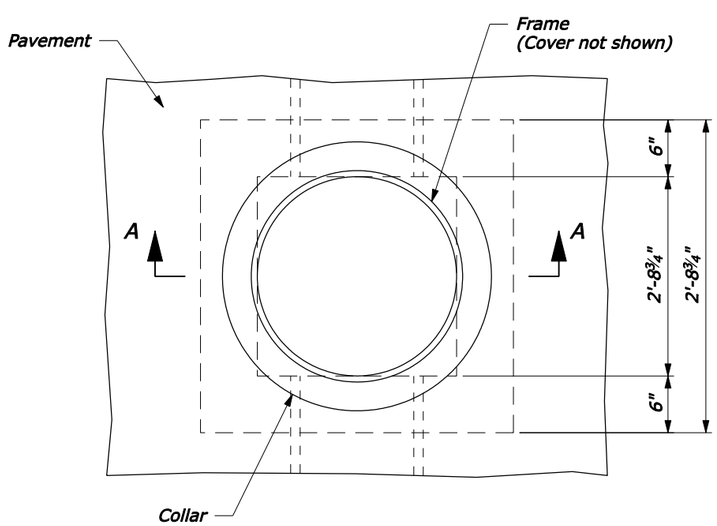

PLAN

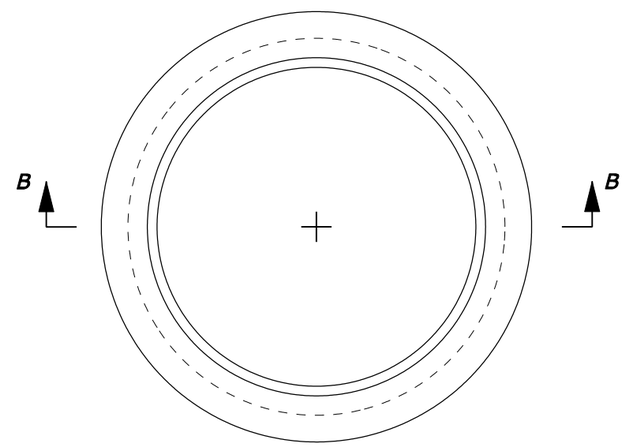

FRAME

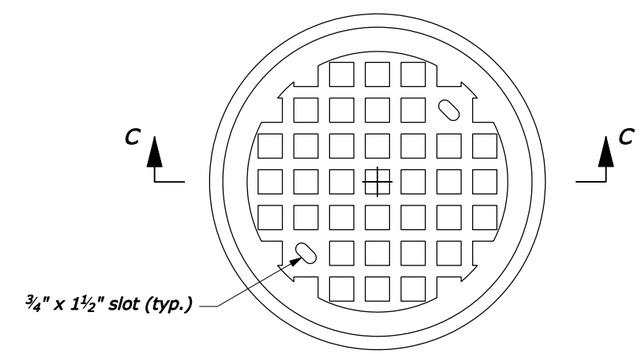

COVER

NO SCALE

U.S. DEPARTMENT OF TRANSPORTATION
FEDERAL HIGHWAY ADMINISTRATION
FEDERAL LANDS HIGHWAY

U.S. CUSTOMARY STANDARD

MANHOLE

STANDARD APPROVED FOR USE 6/2005

REVISED:

STANDARD
604-9

F:\StanDraw\st60409.dgn [US Customary] 20-Jun-2005 08:41 AM