STATE	PROJECT	SHEET NUMBER

NOTE:

1. Frame and cover dimensions may vary slightly to allow manufacturer's standards.
2. MASS: (Approximate, cast iron)
   Frame - 39 ± 2 kg
   Cover - 38 ± 2 kg
3. All reinforcing bars are #16 placed a minimum 40 mm clear from face of concrete. In floors, place bars on 150 mm centers each way. In walls, place horizontal bars on 150 mm centers and vertical bars on 300 mm centers.
4. Dimensions without units are millimeters.

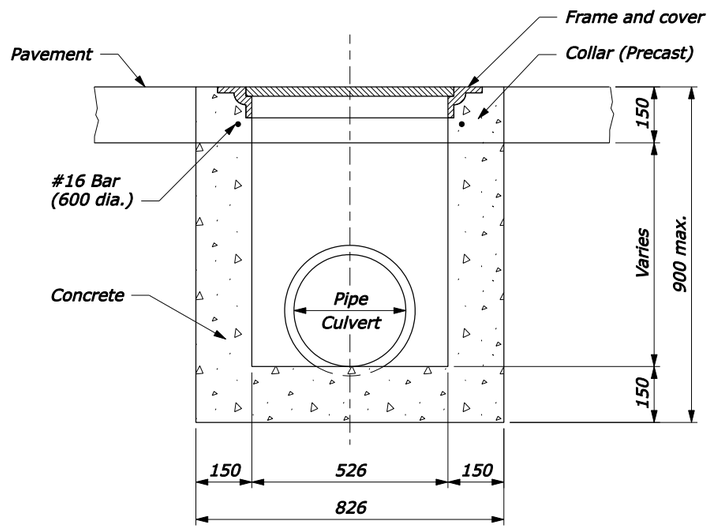

SECTION A-A

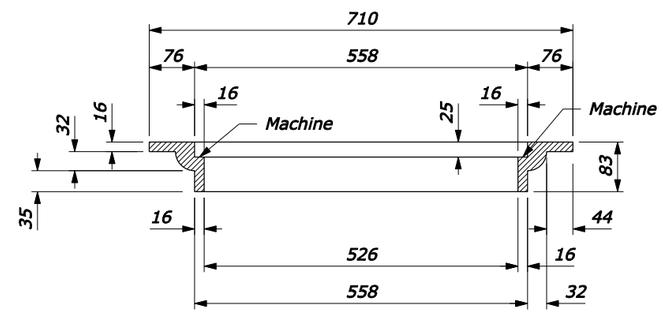

SECTION B-B

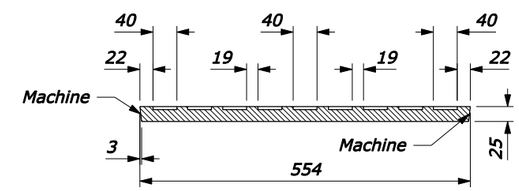

SECTION C-C

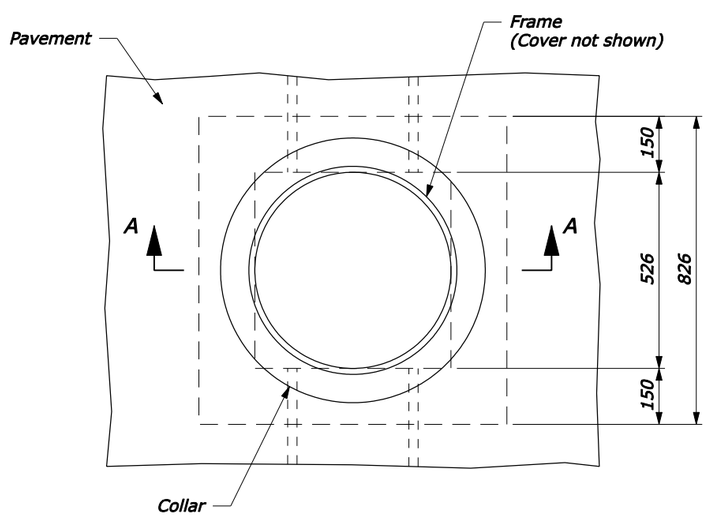

PLAN

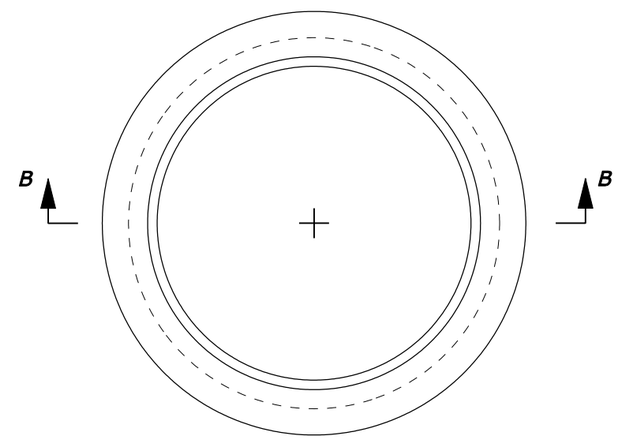

FRAME

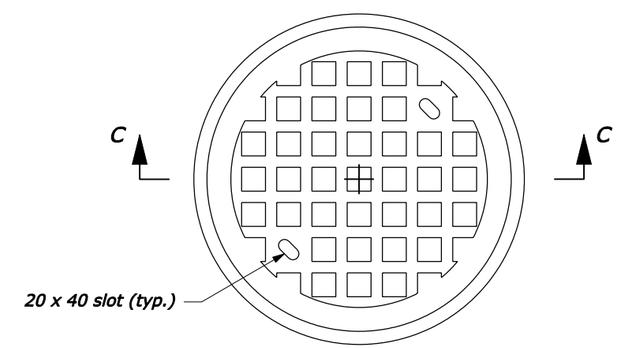

COVER

NO SCALE

U.S. DEPARTMENT OF TRANSPORTATION
FEDERAL HIGHWAY ADMINISTRATION
FEDERAL LANDS HIGHWAY

METRIC STANDARD

MANHOLE

STANDARD APPROVED FOR USE 3/1996
REVISED: 5/1997 6/2005

STANDARD
M604-9

F:\StanDraw\st60409.dgn [Metric] 20-Jun-2005 08:39 AM