STATE	PROJECT	SHEET NUMBER

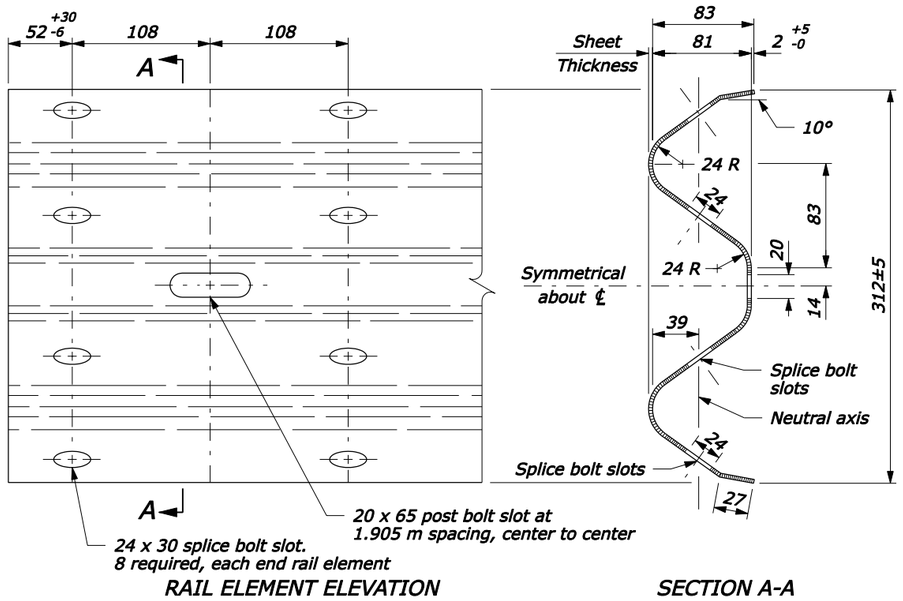

RAIL ELEMENT ELEVATION

SECTION A-A

W BEAM RAIL MEMBERS

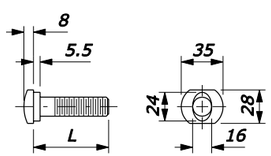

M16 GUARDRAIL BOLT

L	Thread Length
35	30 minimum
50	45 minimum
255	100 minimum
460	100 minimum
640	100 minimum

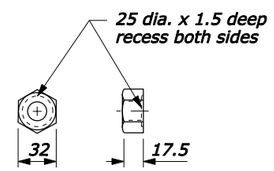

M16 RECESS NUT

GUARDRAIL BOLT AND RECESS NUT

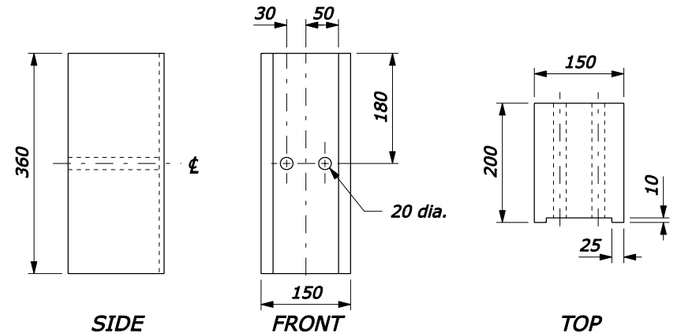

SIDE

FRONT

TOP

WOOD BLOCK

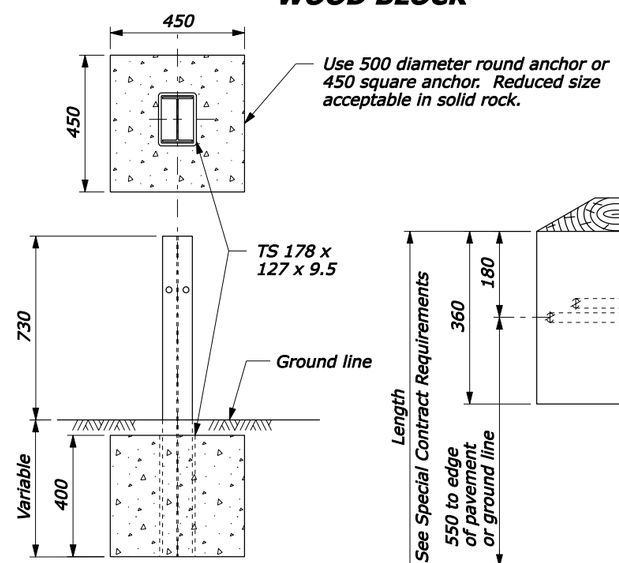

CONCRETE ANCHOR FOR SHORT GUARDRAIL POST

(See Note 1 and 2)

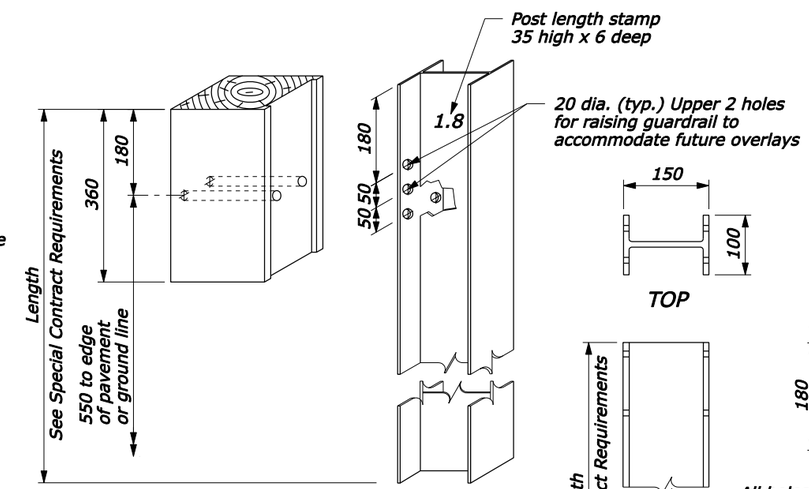

ALTERNATE HOLE ARRANGEMENT POST AND BLOCK DETAIL

STRUCTURAL SHAPE POST

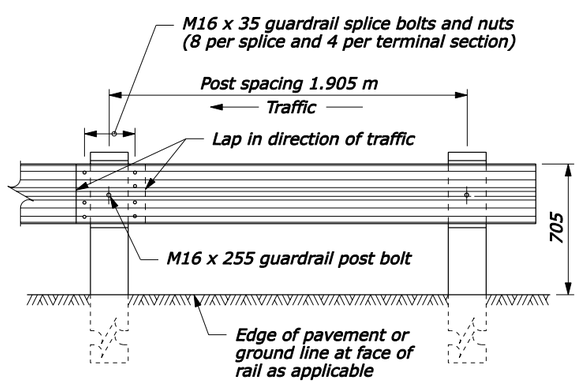

POST SPACING STANDARD POST SECTION

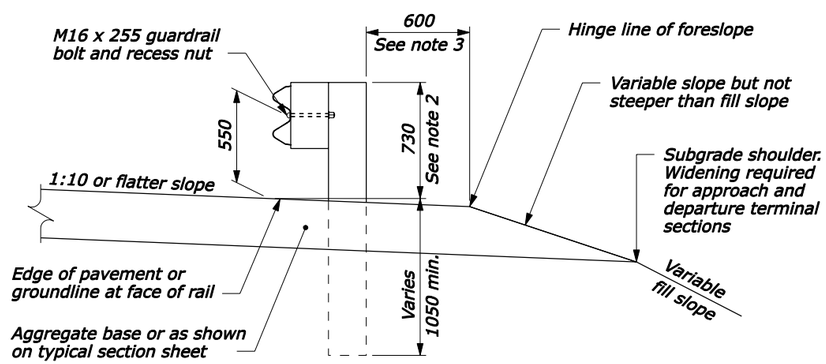

TYPICAL GUARDRAIL CROSS SECTION

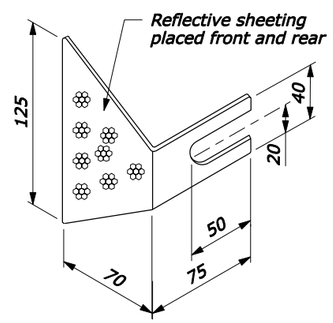

REFLECTOR TAB

(See Note 4)

NO SCALE

NOTE:

1. Use no more than 3 short guardrail posts in a row.
2. If directed to use alternate hole arrangement, post above ground shall be 840 mm tall.
3. See Special Contract Requirements when 2.1 m or longer posts are specified.
4. Install reflector tab between post bolt and rail, every fourth post. Alternate reflector tab shapes are acceptable.
5. Dimensional tolerances not shown or implied are intended to be those consistent with the proper functioning of the part, including its appearance, and accepted manufacturing practices.
6. Furnish hardware in the metric sizes shown. Equivalent US Customary sizes may be used when metric sizes are unavailable.
7. Dimensions without units are millimeters.

U.S. DEPARTMENT OF TRANSPORTATION
FEDERAL HIGHWAY ADMINISTRATION
FEDERAL LANDS HIGHWAY

METRIC STANDARD

G4 W-BEAM GUARDRAIL STEEL POSTS

STANDARD APPROVED FOR USE 3/1996

REVISED: 6/1997 12/1998 6/2005

STANDARD M617-11

17-Jun-2005 08:18 AM
F:\StanDraw\st61711.dgn [Metric]