STATE	PROJECT	SHEET NUMBER

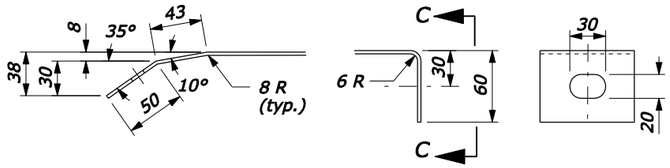

VIEW A-A SECTION B-B VIEW C-C

DIAPHRAGM PLATE DETAILS

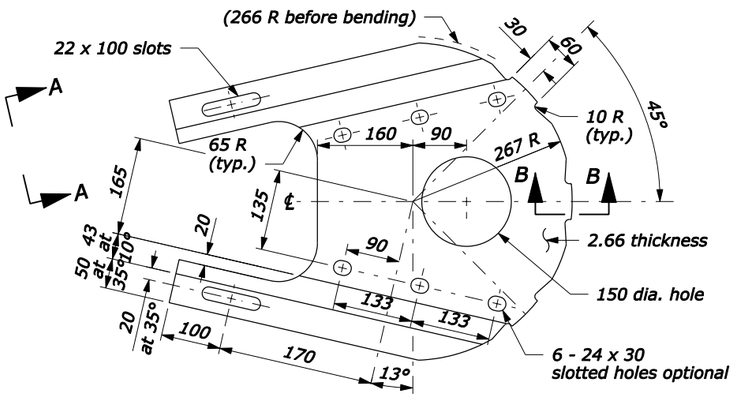

DIAPHRAGM PLATE

(2 required each terminal)

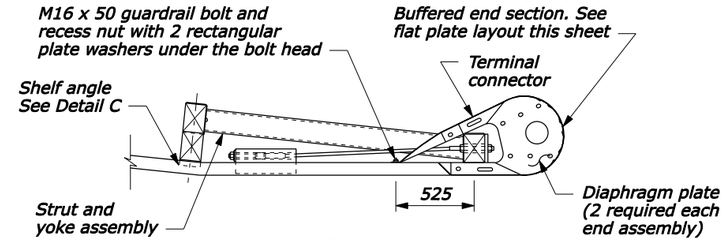

PLAN

NOTE:

1. See Standard M617-15 for other details.
2. Dimensional tolerances not shown or implied are Intended to be those consistent with the proper functioning of the part, including its appearance, and accepted manufacturing practices.
3. Furnish hardware in metric sizes shown. Equivalent U.S. Customary sizes may be used when metric sizes are not available.
4. Dimensions without units are millimeters.

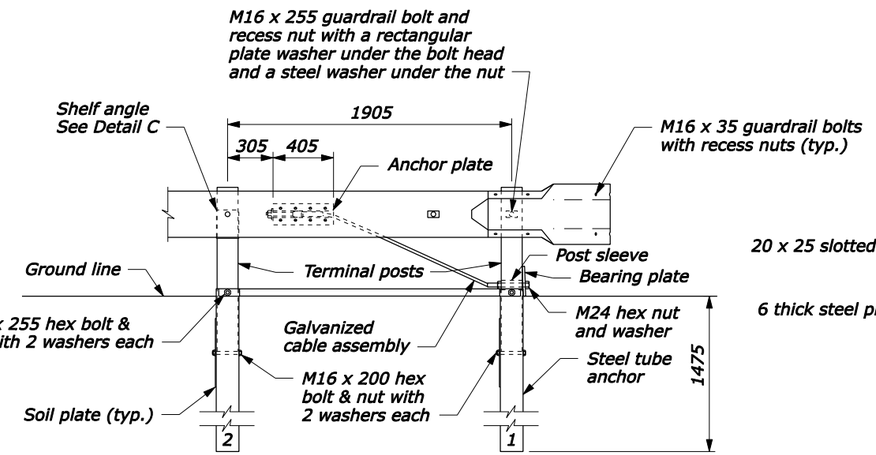

ELEVATION

ANCHORAGE ASSEMBLY

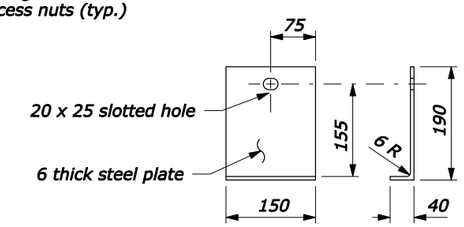

DETAIL C
POST #2 SHELF ANGLE

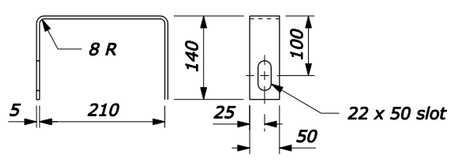

YOKE DETAILS

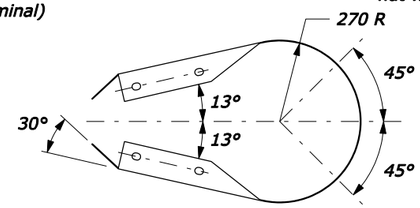

PLAN

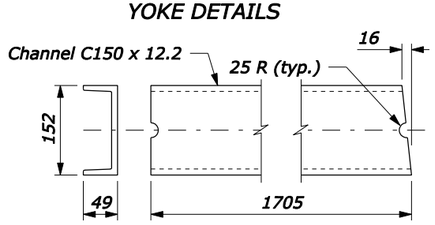

STRUT DETAILS

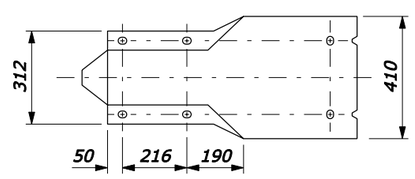

ELEVATION

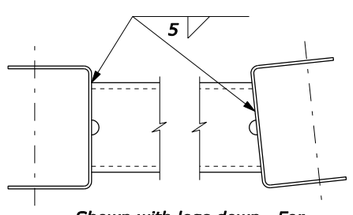

Shown with legs down. For
opposite hand, install legs up.

STRUT AND YOKE ASSEMBLY

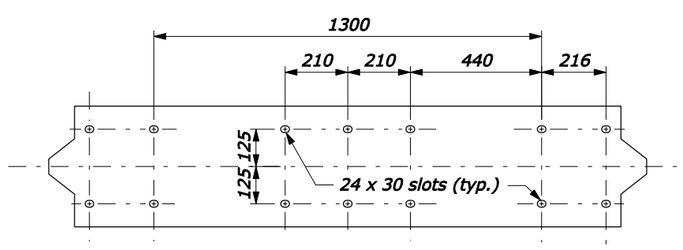

BUFFERED END SECTION FLAT PLATE LAYOUT

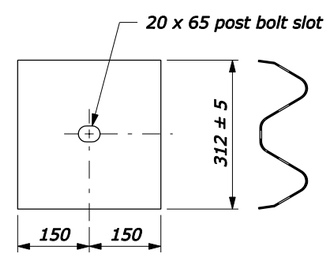

W-BEAM BACK UP PLATE

POSTS #4, 5, 7, & 8

NO SCALE

U.S. DEPARTMENT OF TRANSPORTATION
FEDERAL HIGHWAY ADMINISTRATION
FEDERAL LANDS HIGHWAY

METRIC STANDARD

G4 W-BEAM GUARDRAIL MODIFIED ECCENTRIC LOADER TERMINAL MELT ANCHORAGE ASSEMBLY

STANDARD APPROVED FOR USE 3/1996

REVISED: 8/1997 6/2005

STANDARD M617-13

17-Jun-2005 08:29 AM
F:\StanDraw\st61713.dgn [Metric]