STATE	PROJECT	SHEET NUMBER

NOTE:

1. Dimensional tolerances not shown or implied are intended to be those consistent with the proper functioning of the part, including its appearance, and accepted manufacturing practices.

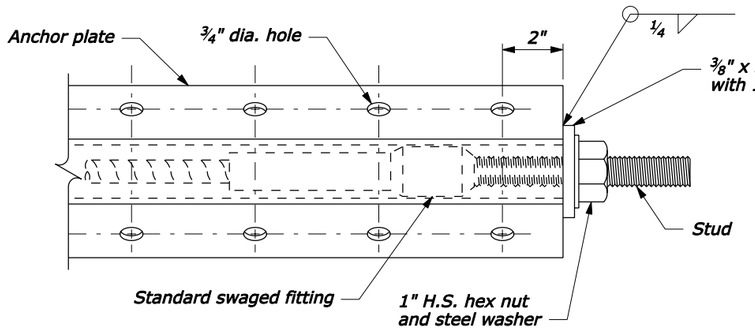

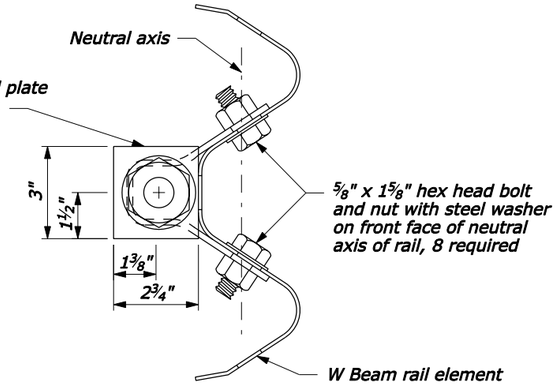

ANCHOR PLATE DETAILS FOR LST ANCHORAGE ASSEMBLY

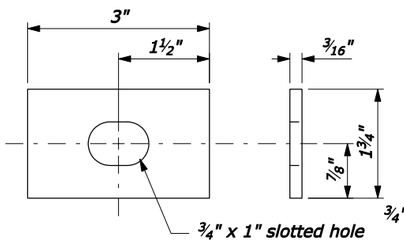

RECTANGULAR PLATE WASHER

(Use to attach the section to the post of anchorage assembly)

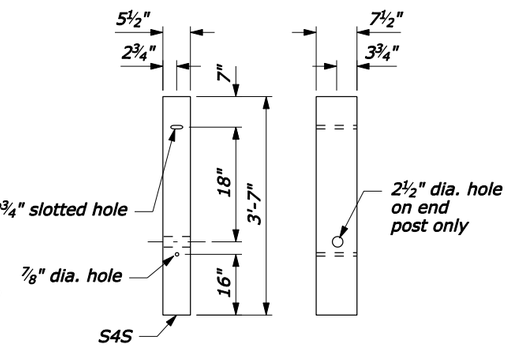

TERMINAL POST

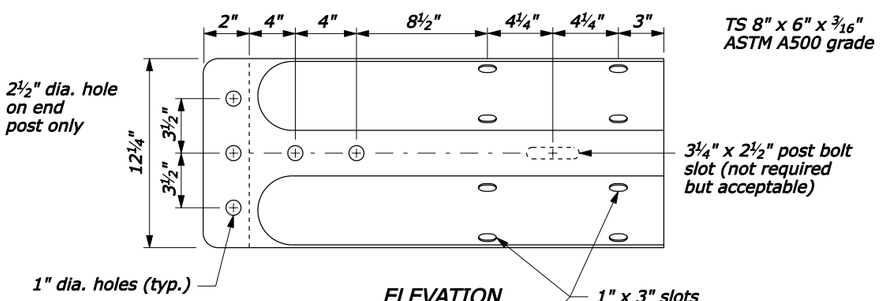

ELEVATION

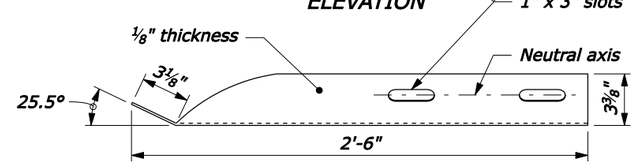

PLAN

TERMINAL CONNECTOR

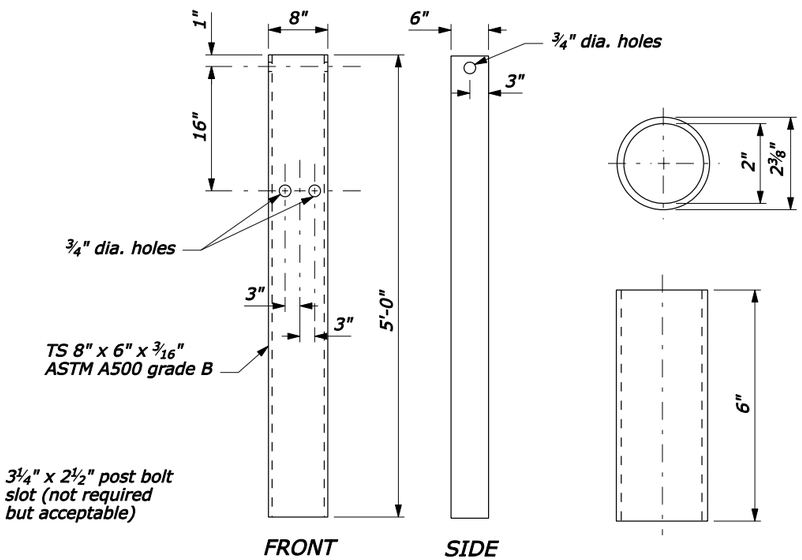

STEEL TUBE ANCHOR

POST SLEEVE

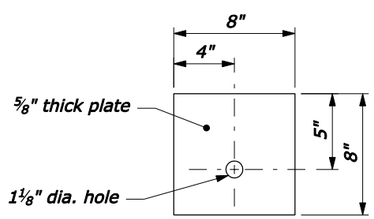

BEARING PLATE

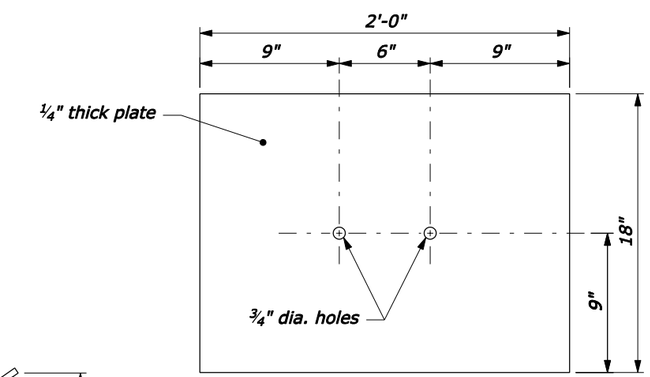

SOIL PLATE

(2 REQUIRED)

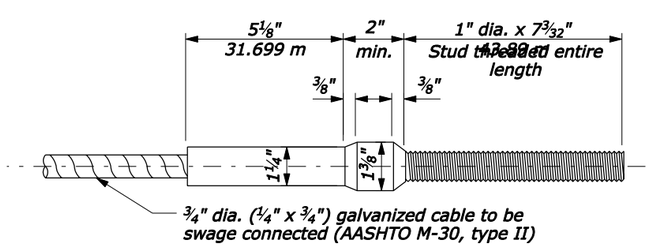

CABLE ASSEMBLY

(Standard swaged fitting and stud)

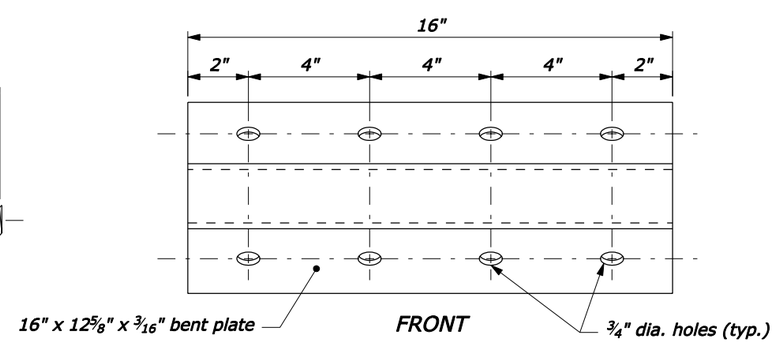

FRONT

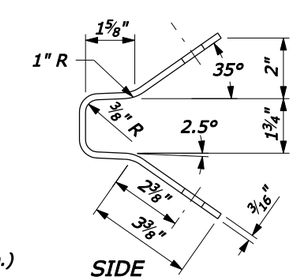

SIDE

GUARDRAIL ANCHOR PLATE

NO SCALE

U.S. DEPARTMENT OF TRANSPORTATION
FEDERAL HIGHWAY ADMINISTRATION
FEDERAL LANDS HIGHWAY

U.S. CUSTOMARY STANDARD

G4 W BEAM GUARDRAIL MELT, LST & CRT ANCHORAGE ASSEMBLY DETAILS

STANDARD APPROVED FOR USE 1/1994
REVISED: 4/1994 6/2005

STANDARD 617-15

17-Jun-2005 12:34 PM

F:\StanDraw\st61715.dgn [US Customary]