STATE	PROJECT	SHEET NUMBER

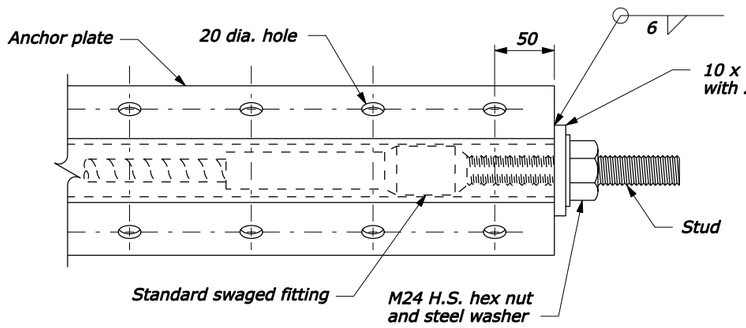

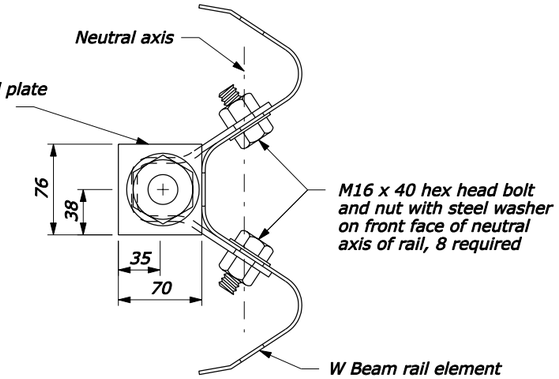

ANCHOR PLATE DETAILS FOR LST ANCHORAGE ASSEMBLY

NOTE:

1. Dimensional tolerances not shown or implied are intended to be those consistent with the proper functioning of the part, including its appearance, and accepted manufacturing practices.
2. Furnish hardware in the metric sizes shown. Equivalent U.S. Customary sizes may be used when metric sizes are not available.
3. Dimensions without units are millimeters.

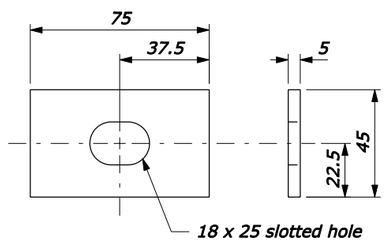

RECTANGULAR PLATE WASHER

(Use to attach the section to the post of anchorage assembly)

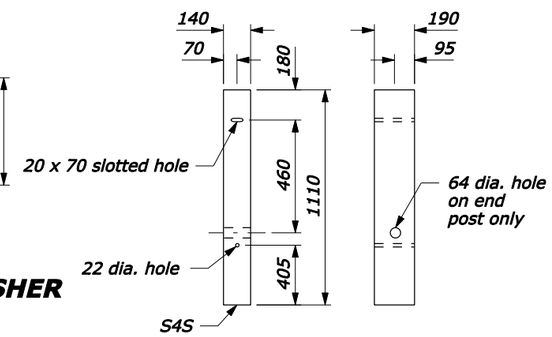

TERMINAL POST

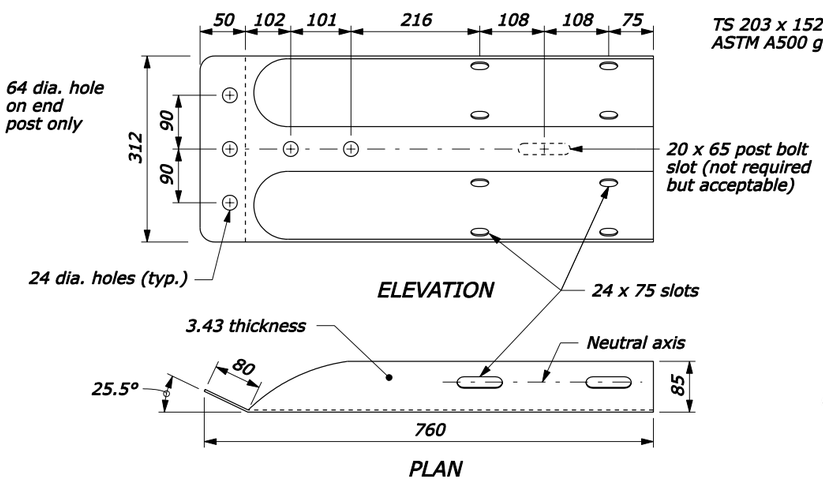

TERMINAL CONNECTOR

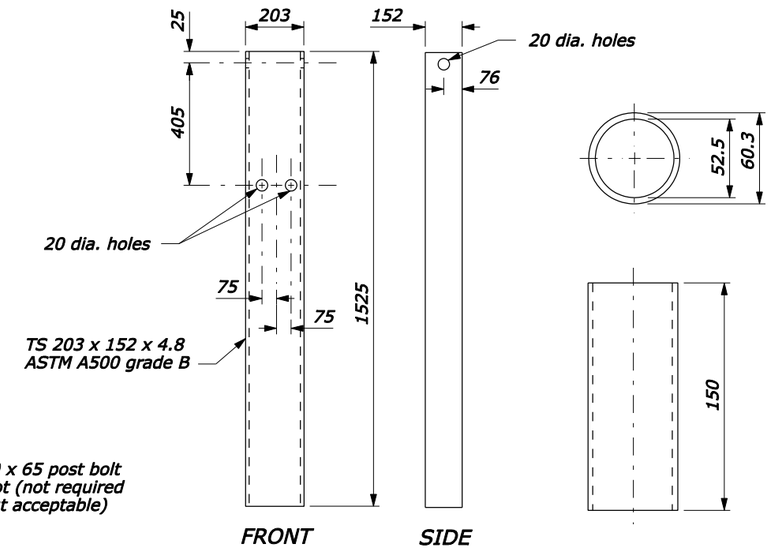

STEEL TUBE ANCHOR

POST SLEEVE

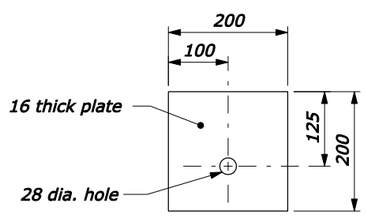

BEARING PLATE

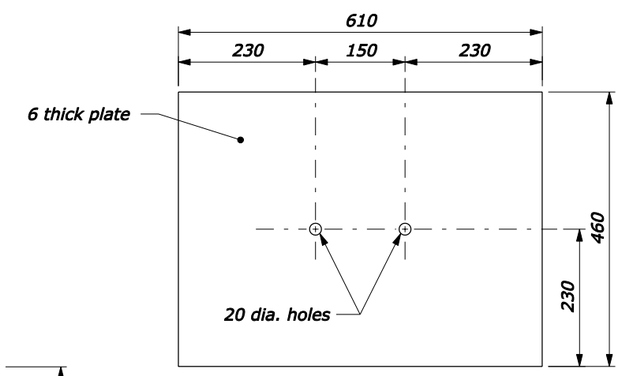

SOIL PLATE

(2 REQUIRED)

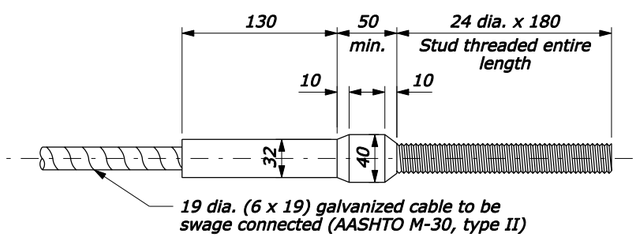

CABLE ASSEMBLY

(Standard swaged fitting and stud)

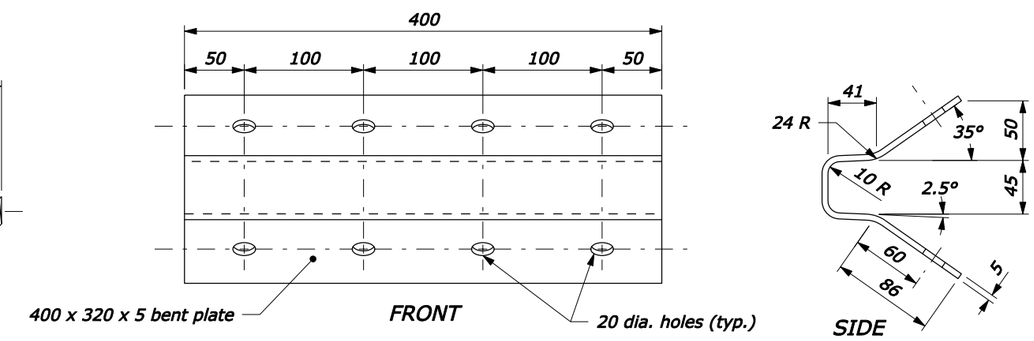

GUARDRAIL ANCHOR PLATE

NO SCALE

U.S. DEPARTMENT OF TRANSPORTATION
FEDERAL HIGHWAY ADMINISTRATION
FEDERAL LANDS HIGHWAY

METRIC STANDARD

G4 W BEAM GUARDRAIL MELT, LST & CRT ANCHORAGE ASSEMBLY DETAILS

STANDARD APPROVED FOR USE 3/1996

REVISED: 8/1997 12/1998 6/2005

STANDARD M617-15

17-Jun-2005 12:31 PM

F:\StanDraw\st61715.dgn [Metric]