STATE	PROJECT	SHEET NUMBER

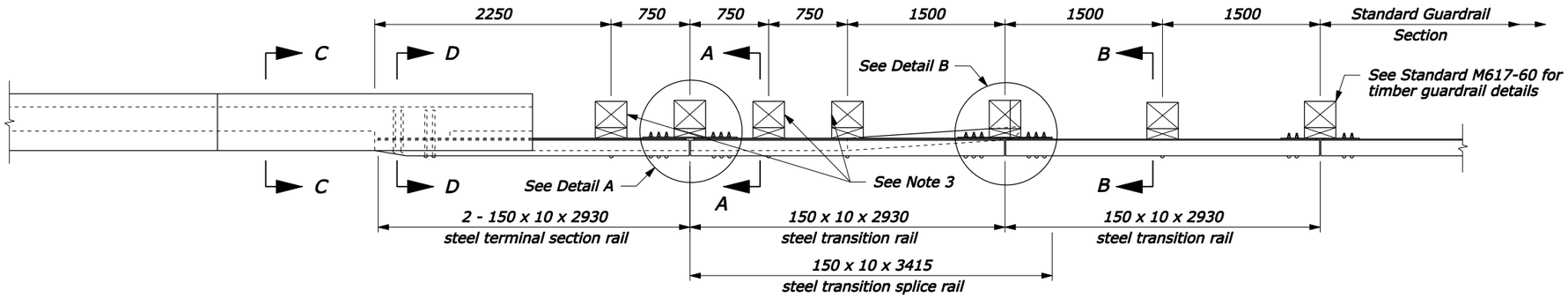

PLAN

NOTE:

1. See the following sheets for Sections A-A through C-C, steel rail layouts, and other details.
2. Use weathering steel for all structural steel land fastener hardware.
3. For posts 1, 3, and 4, use a 200 x 225 x 300 mm block for the blockout, and an M16 x 650 mm carriage bolt with hex nut and plate washer.
4. Furnish hardware in the metric sizes shown. Equivalent US Customary sizes may be used when metric sizes are not available.
5. Dimensions without units are millimeters.

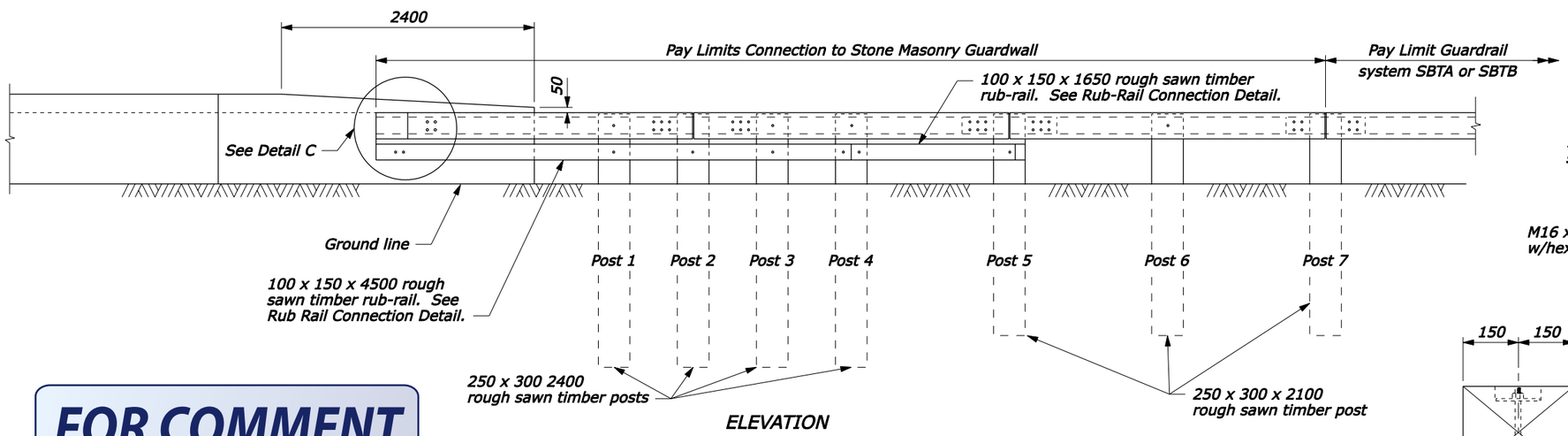

ELEVATION

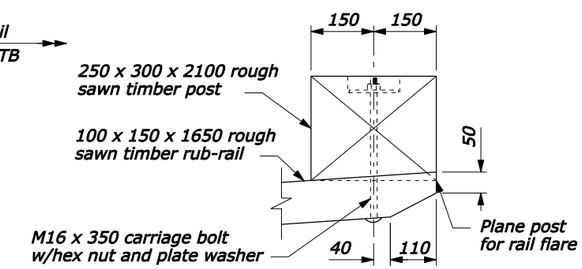

POST 5

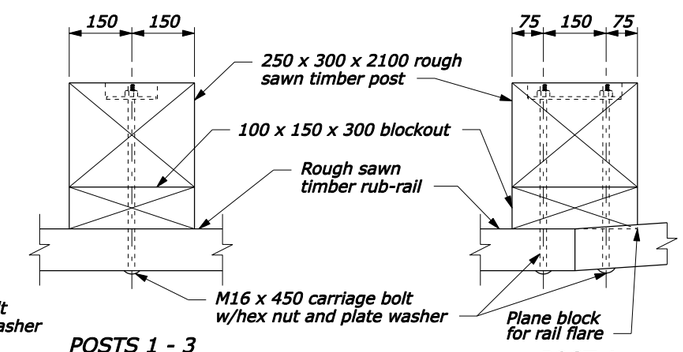

POSTS 1 - 3

POST 4

RUB-RAIL CONNECTION

FOR COMMENT

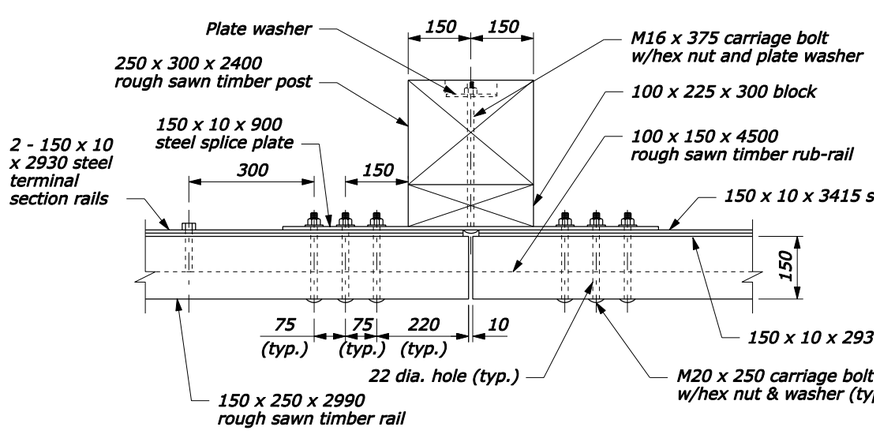

DETAIL A

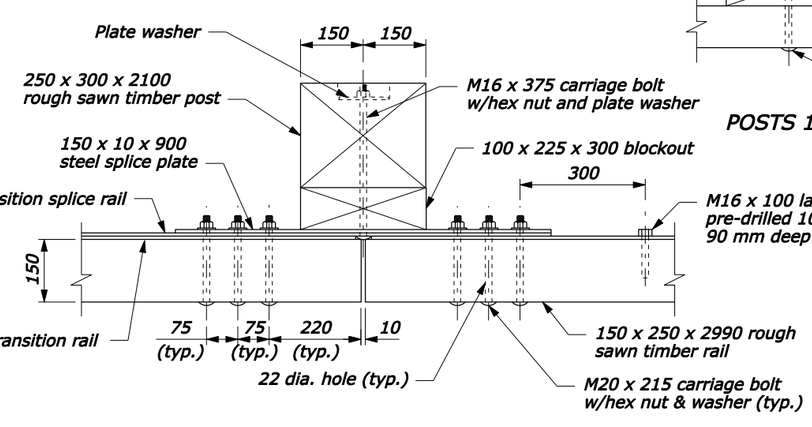

DETAIL B

POST CONNECTION

NO SCALE

U.S. DEPARTMENT OF TRANSPORTATION
FEDERAL HIGHWAY ADMINISTRATION
FEDERAL LANDS HIGHWAY

METRIC STANDARD

STEEL-BACKED TIMBER GUARDRAIL TL-2 CONNECTION TO STONE MASONRY GUARDWALL

Sheet 1 of 3

STANDARD APPROVED FOR USE --/----

REVISED:
DRAFT: 1/2005

STANDARD M617-64

14-Apr-2005 02:42 PM

F:\StanDraw\Draft\V8\st61764.dgn [Metric]

STATE	PROJECT	SHEET NUMBER

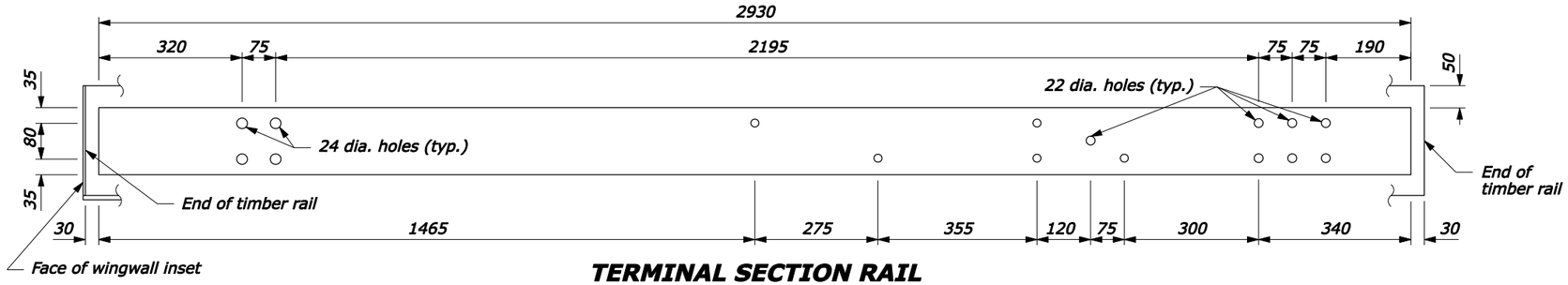

TERMINAL SECTION RAIL
150 x 10 x 2930

NOTE:

1. Pre-drill 18 mm holes in blocks outs and posts.
2. Furnish hardware in the metric sizes shown. Equivalent US Customary sizes may be used when metric sizes are not available.
3. Dimensions without units are millimeters.

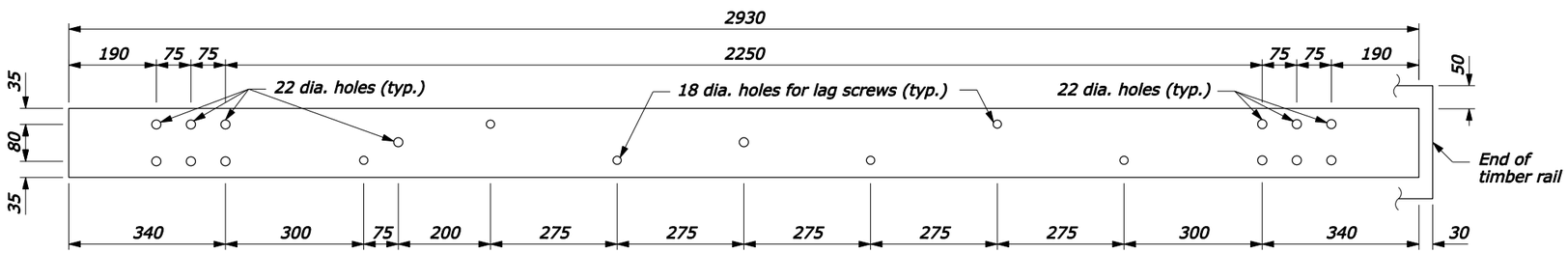

TRANSITION RAIL
150 x 10 x 2930

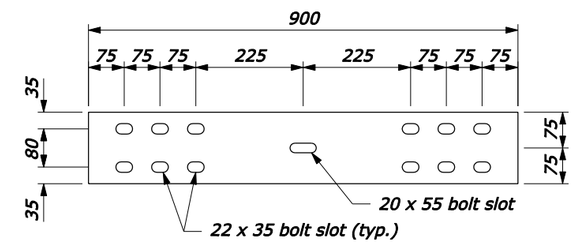

SPLICE PLATE
150 x 10 x 900

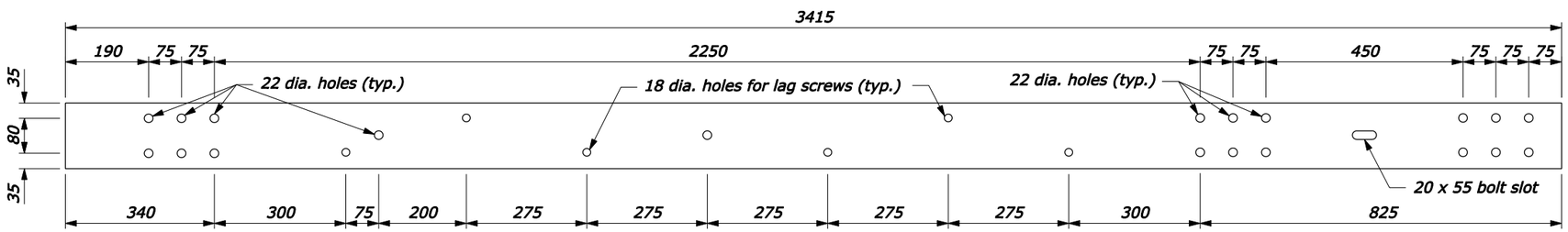

TRANSITION SPLICE RAIL
150 x 10 x 3415

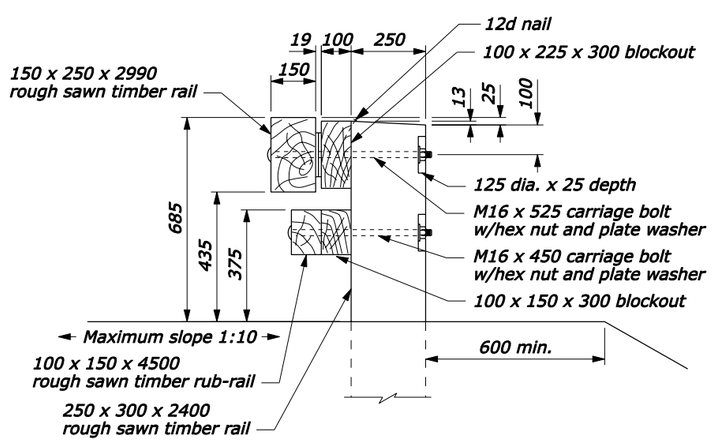

SECTION A-A

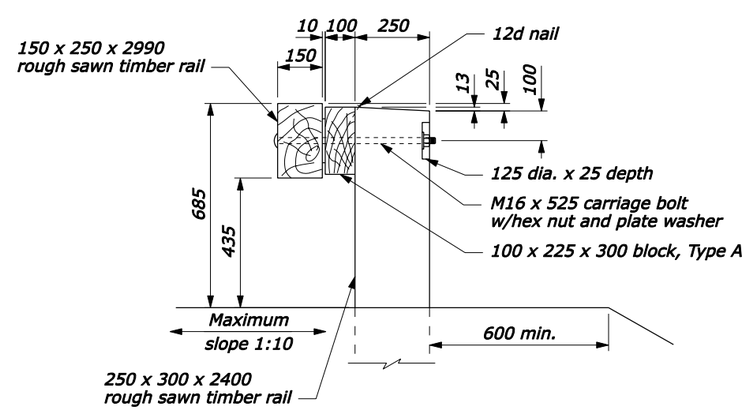

SECTION B-B

FOR COMMENT

NO SCALE

U.S. DEPARTMENT OF TRANSPORTATION
FEDERAL HIGHWAY ADMINISTRATION
FEDERAL LANDS HIGHWAY

METRIC STANDARD

STEEL-BACKED TIMBER GUARDRAIL TL-2 CONNECTION TO STONE MASONRY GUARDWALL

Sheet 2 of 3

STANDARD APPROVED FOR USE --/----

REVISED:
DRAFT: 1/2005

STANDARD
M617-64

F:\StanDraw\Draft\V8\st61764.dgn [Metric] 19-Jan-2005 10:33 AM

STATE	PROJECT	SHEET NUMBER

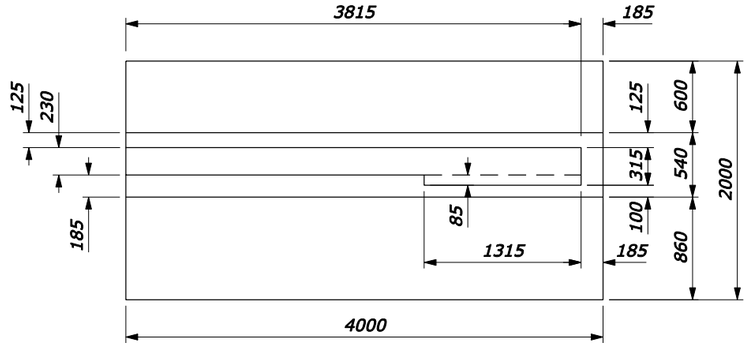

PLAN

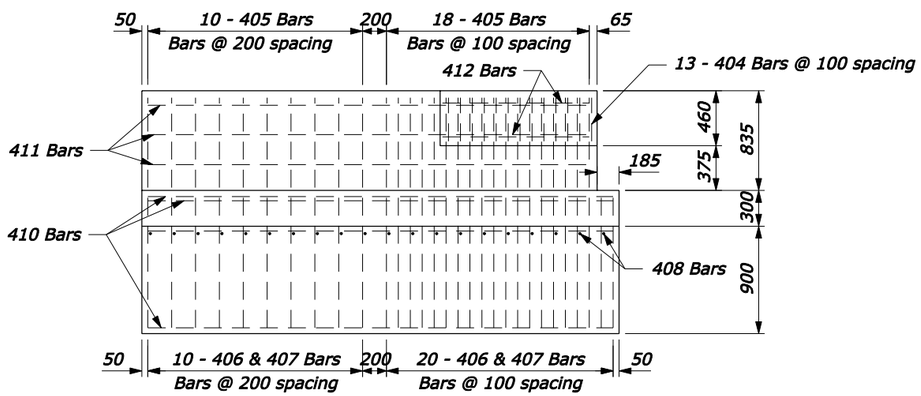

ELEVATION

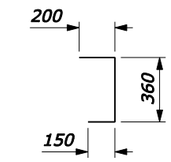

404 Bars

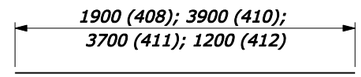

408, 410, 411, and 412 Bars

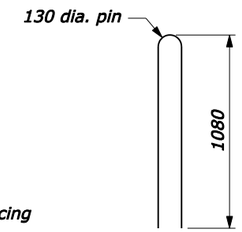

405 Bars

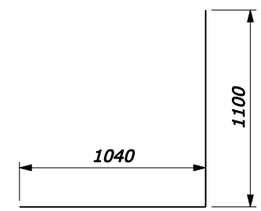

405 Bars

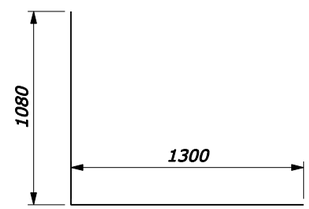

406 Bars

BAR DETAILS

NOTE:

1. CONCRETE: Structural concrete Class A(AE), with a specified minimum 28-day compressive strength F'c=30 MPa. Vibrate all concrete. Chamfer exposed edges 20 mm unless otherwise shown. Do not use calcium chloride additives in the concrete.
2. REINFORCING STEEL: Reinforcing steel Grade 420 (ASTM A615M-96a, Grade 420) deformed billet steel bars conforming to AASHTO M31M. The minimum concrete covering to the face of any bar is 50 mm unless otherwise shown. All bars are Metric size #16.
3. Construct footing against undisturbed material or backfill with well compacted granular material.
4. Dimensions without units are millimeters.

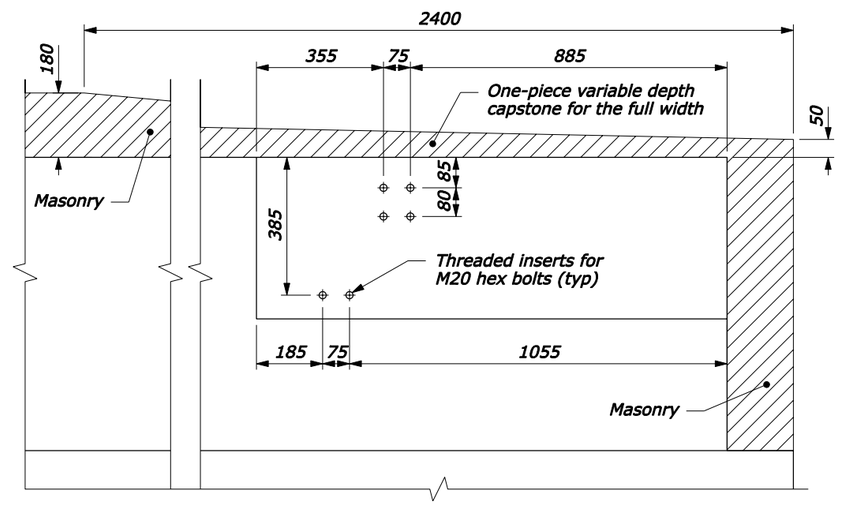

DETAIL C

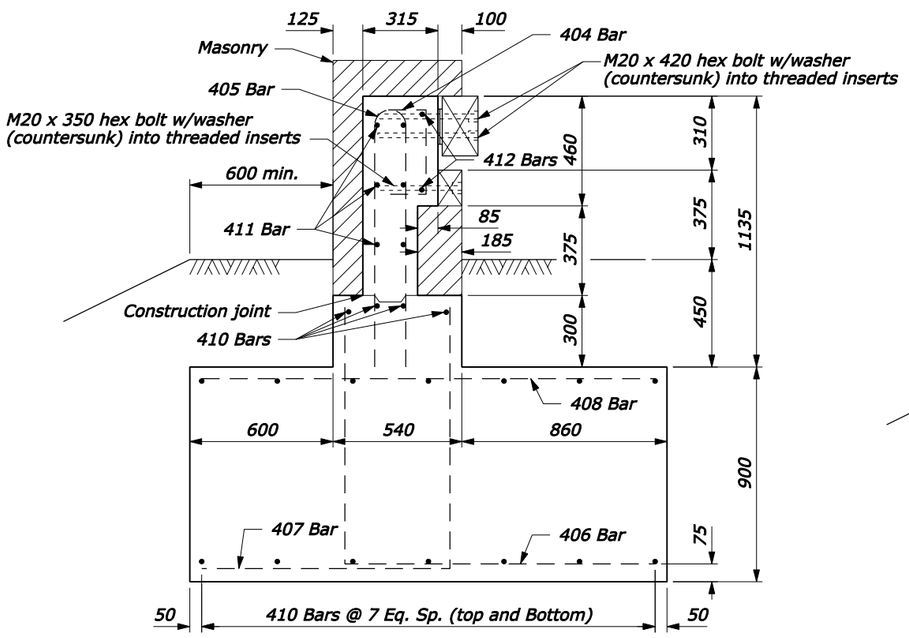

SECTION D-D

PARAPET END BLOCK

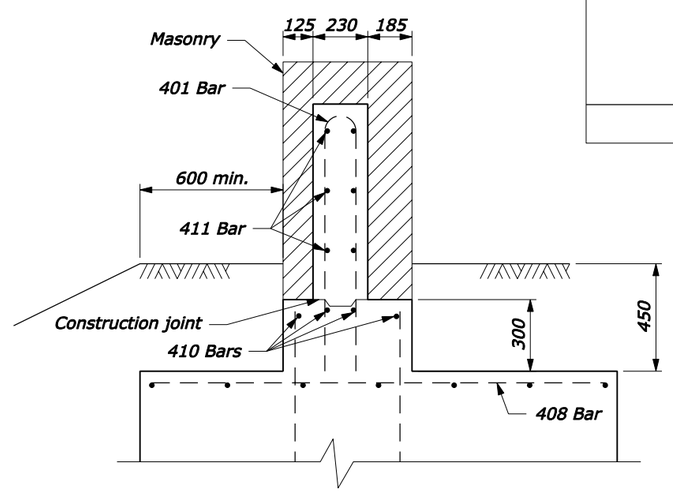

SECTION C-C

FOR COMMENT

NO SCALE

U.S. DEPARTMENT OF TRANSPORTATION
FEDERAL HIGHWAY ADMINISTRATION
FEDERAL LANDS HIGHWAY

METRIC STANDARD

STEEL-BACKED TIMBER GUARDRAIL TL-2 CONNECTION TO STONE MASONRY GUARDWALL

Sheet 3 of 3

STANDARD APPROVED FOR USE --/----

REVISED:

DRAFT: 1/2005

STANDARD M617-64

F:\StanDraw\Draft\V8\at61764.dgn [Metric] 19-Jan-2005 10:34 AM