STATE	PROJECT	SHEET NUMBER

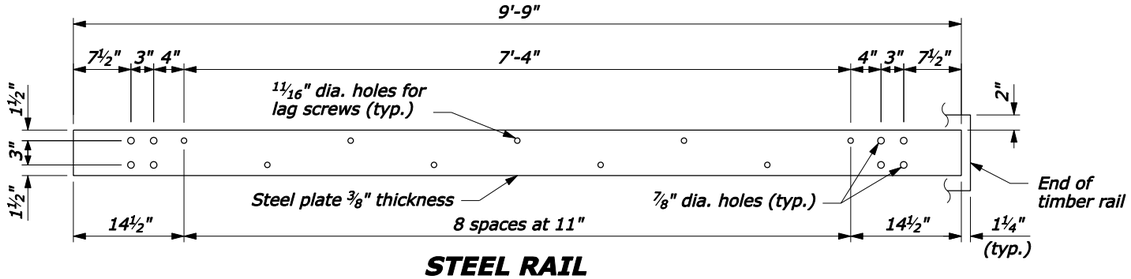

STEEL RAIL

PLATE WASHER

NOTE:

1. Use the Type A, blocked-out, system or the Type B, non-blocked-out, system as specified in the plans.
2. Use weathering steel for all structural steel and fastener hardware as specified.
3. Place a terminal section (See Standards 617-61 and 617-62) on both approach and trailing ends of barrier installations.

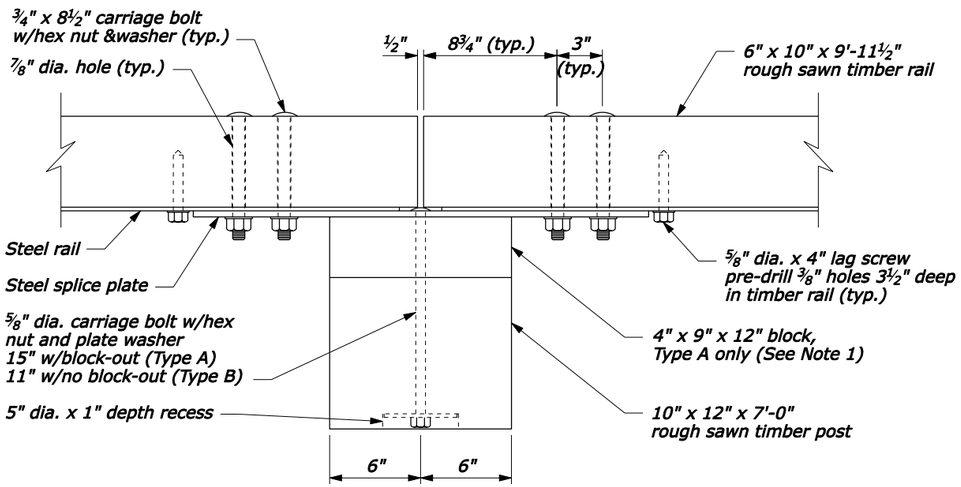

PLAN

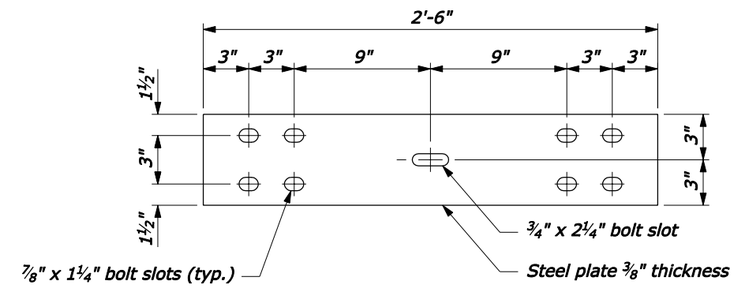

STEEL SPLICE PLATE

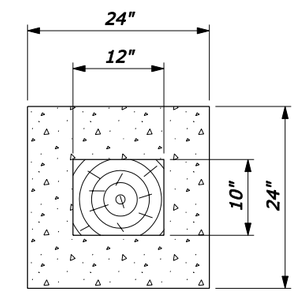

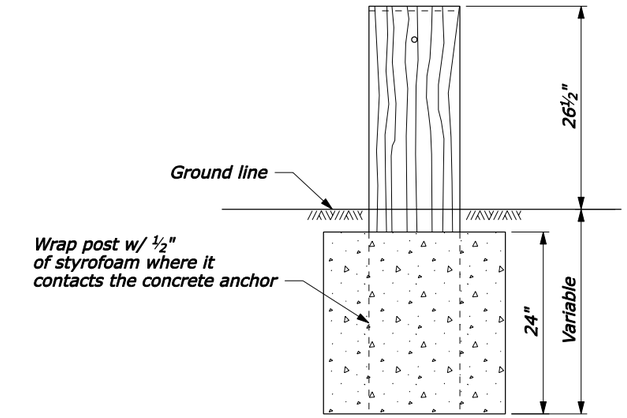

24" dia. round anchor is an acceptable alternative.
Reduced size acceptable in solid rock.

CONCRETE ANCHOR FOR SHORT GUARDRAIL POST

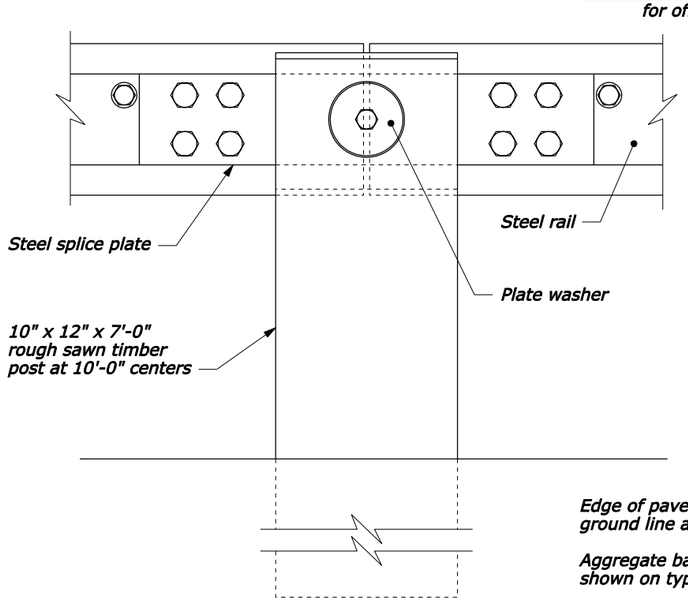

ELEVATION

POST CONNECTION

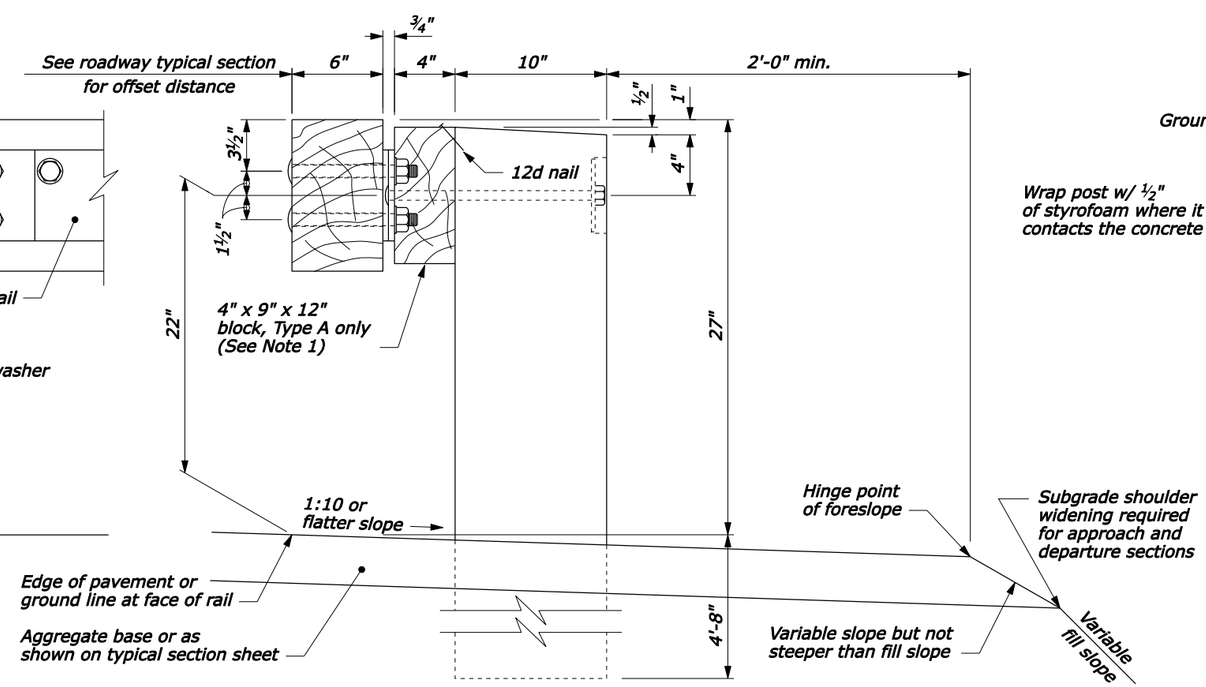

TYPICAL GUARDRAIL CROSS SECTION

NO SCALE

U.S. DEPARTMENT OF TRANSPORTATION
FEDERAL HIGHWAY ADMINISTRATION
FEDERAL LANDS HIGHWAY

U.S. CUSTOMARY STANDARD

STEEL-BACKED TIMBER GUARDRAIL TYPE A & TYPE B

STANDARD APPROVED FOR USE 3/1990
REVISED: 4/1994 6/2005

STANDARD 617-60

F:\StanDraw\st61760.dgn [US Customary] 16-Jun-2005 03:53 PM

STATE	PROJECT	SHEET NUMBER

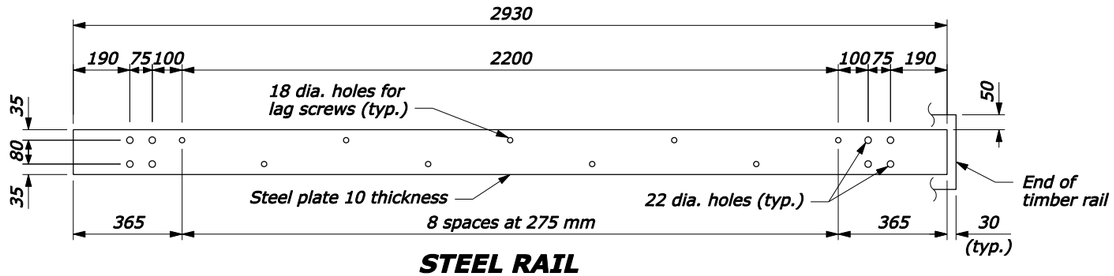

STEEL RAIL

PLATE WASHER

NOTE:

1. Use the Type A, blocked-out, system or the Type B, non-blocked-out, system as specified in the plans.
2. Use weathering steel for all structural steel and fastener hardware as specified.
3. Place a terminal section (See Standards M617-61 and M617-62) on both approach and trailing ends of barrier installations.
4. Furnish hardware in the metric sizes shown. Equivalent imperial sizes may be used when metric sizes are not available.
5. Dimensions without units are millimeters.

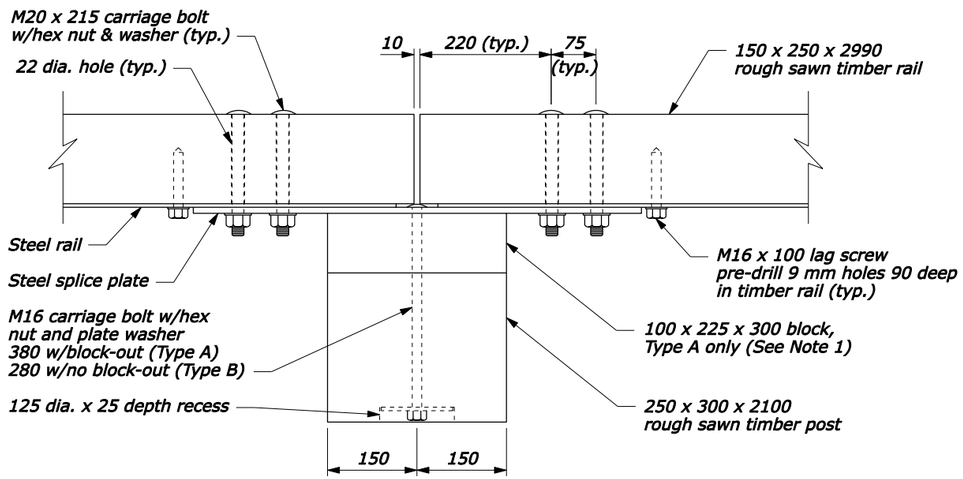

PLAN

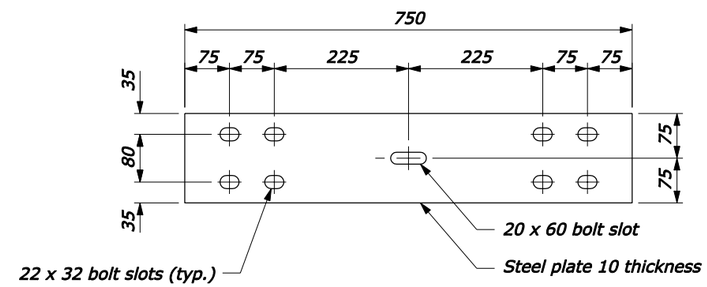

STEEL SPLICE PLATE

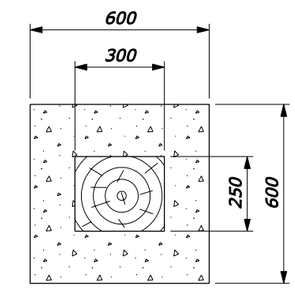

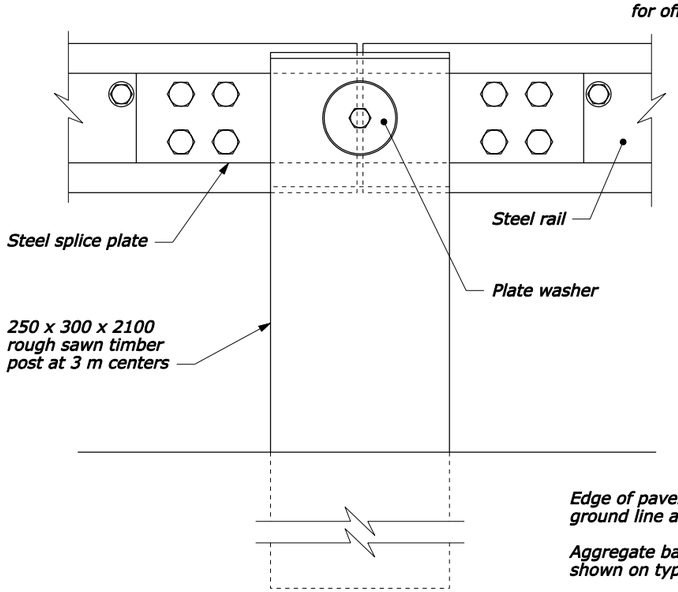

ELEVATION

POST CONNECTION

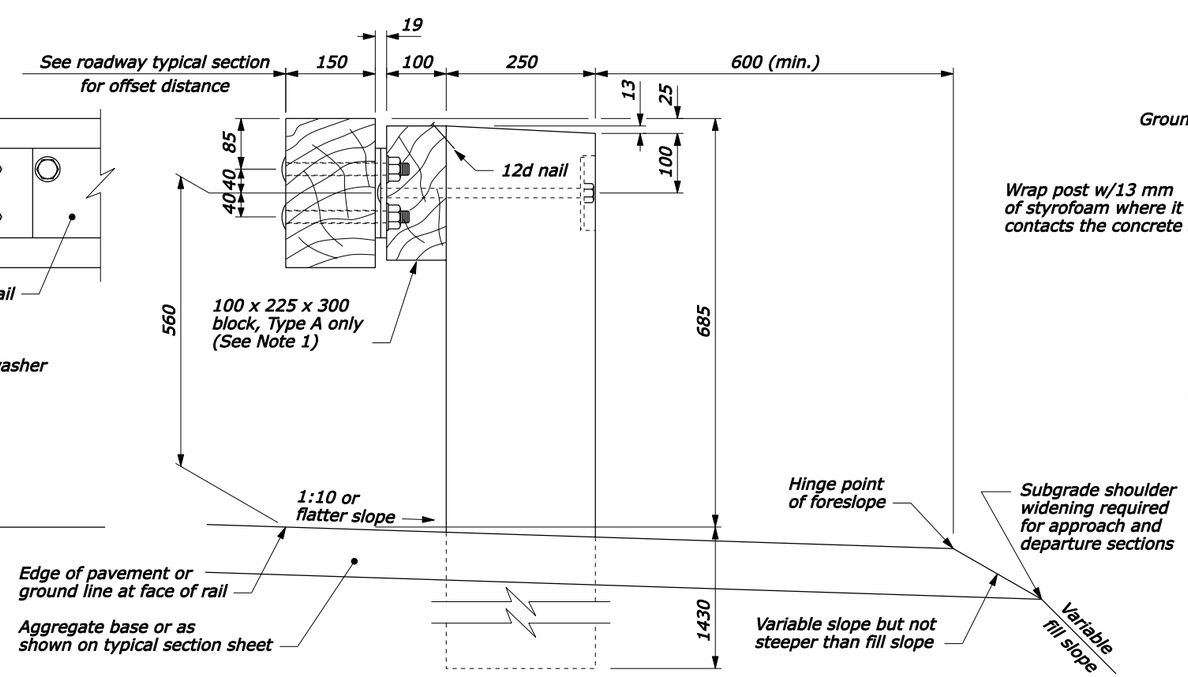

TYPICAL GUARDRAIL CROSS SECTION

NO SCALE

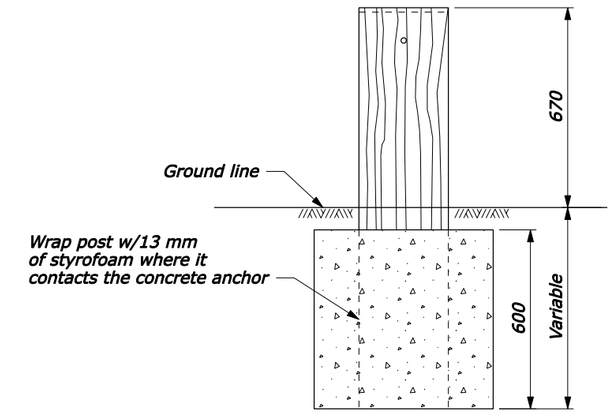

600 dia. round anchor is an acceptable alternative.
Reduced size acceptable in solid rock.

CONCRETE ANCHOR FOR SHORT GUARDRAIL POST

U.S. DEPARTMENT OF TRANSPORTATION
FEDERAL HIGHWAY ADMINISTRATION
FEDERAL LANDS HIGHWAY

METRIC STANDARD

STEEL-BACKED TIMBER GUARDRAIL TYPE A & TYPE B

STANDARD APPROVED FOR USE 3/1996
REVISED: 5/1997 6/2005

STANDARD
M617-60

F:\StanDraw\st61760.dgn [Metric] 16-Jun-2005 03:49 PM

STATE	PROJECT	SHEET NUMBER

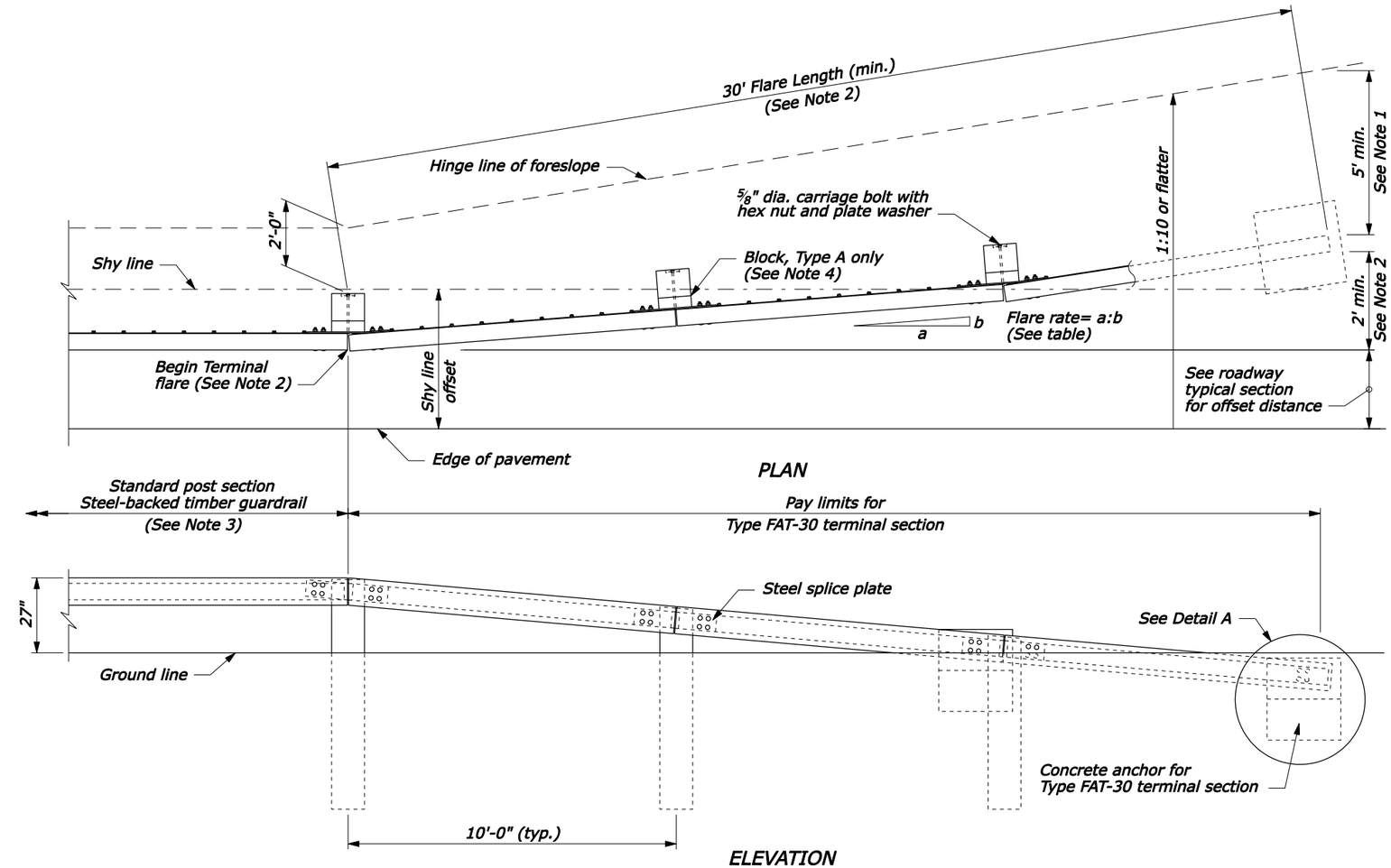

APPROACH & DEPARTURE FLARE WITH FLARED ANCHOR TERMINAL (FAT)

NOTE:

1. Extend the fill widening a minimum of 5 feet behind the guardrail, unless otherwise directed by the CO.
2. The guardrail flare shown in the plan view is the minimum length and rate required. As directed by the CO, flare the guardrail so that the terminal section is outside the clear zone. If the terminal section cannot be located outside the clear zone, it should be flared as far as practical from the road at the maximum rate indicated on the Guardrail Flare Rates table.
3. See Standard 617-60, Steel-Backed Timber Guardrail, Type SBTA and SBTB, for timber, structural steel, and hardware details.
4. On the Type A, blocked-out guardrail, include the blocks in terminal section, except on the concrete anchor. For the Type B, non-blocked-out guardrail, no blocks are included.

GUARDRAIL FLARE RATE TABLE

Design Speed (mph)	Shy line offset (ft)	Flare rate inside shy line (a:b)	Flare rate outside shy line (a:b)
60	8.0	26:1	14:1
50	6.5	21:1	11:1
40	5.0	16:1	8:1
30 and less	3.5	13:1	7:1

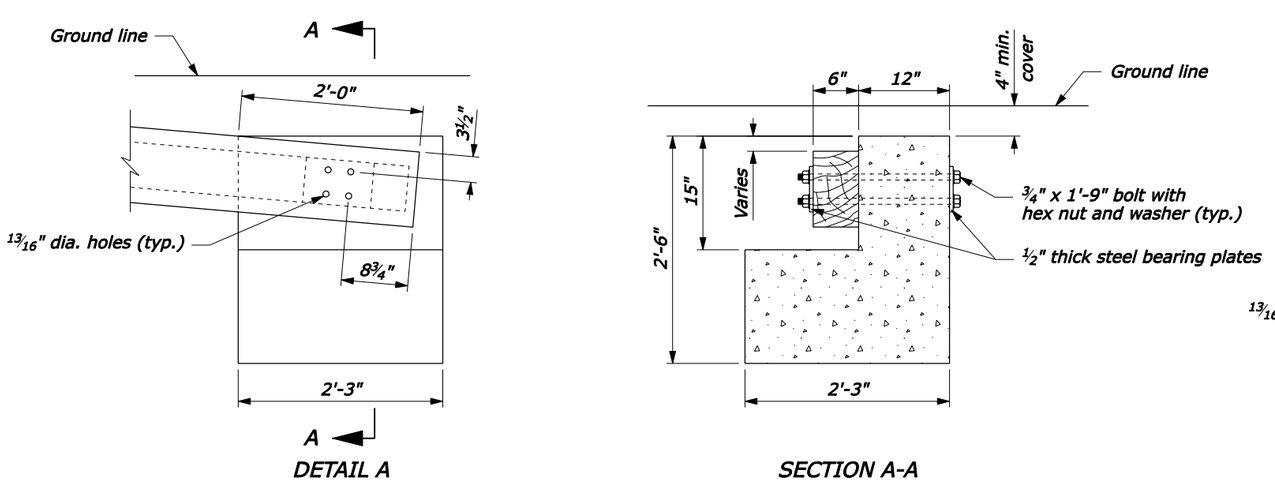

CONCRETE ANCHOR

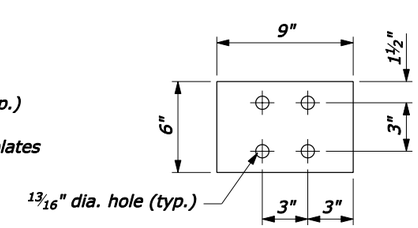

STEEL BEARING PLATE

NO SCALE

U.S. DEPARTMENT OF TRANSPORTATION
FEDERAL HIGHWAY ADMINISTRATION
FEDERAL LANDS HIGHWAY

U.S. CUSTOMARY STANDARD

STEEL-BACKED TIMBER GUARDRAIL TERMINAL SECTION TYPE SBT FAT-30

STANDARD APPROVED FOR USE 1/1990
REVISED: 4/1994 6/2005

STANDARD 617-61

F:\StanDraw\st61761.dgn [US Customary] 16-Jun-2005 03:57 PM

STATE	PROJECT	SHEET NUMBER

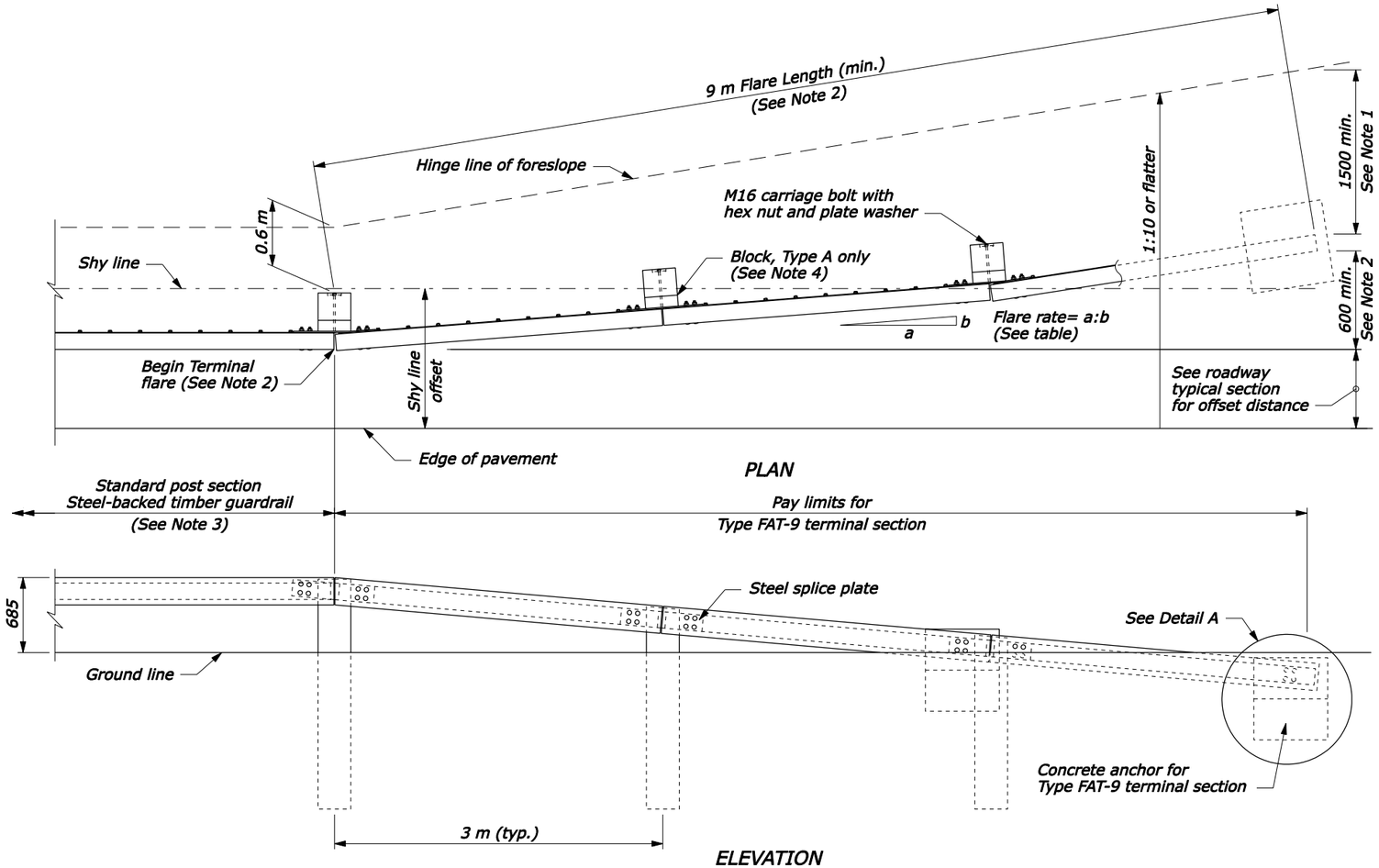

APPROACH & DEPARTURE FLARE WITH FLARED ANCHOR TERMINAL (FAT)

NOTE:

1. Extend the fill widening a minimum of 1.5 m behind the guardrail, unless otherwise directed by the CO.
2. The guardrail flare shown in the plan view is the minimum length and rate required. As directed by the CO, flare the guardrail so that the terminal section is outside the clear zone. If the terminal section cannot be located outside the clear zone, it should be flared as far as practical from the road at the maximum rate indicated on the Guardrail Flare Rates table.
3. See Standard M617-60, Steel-Backed Timber Guardrail, Type SBTA and SBTB, for timber, structural steel, and hardware details.
4. On the Type A, blocked-out guardrail, include the blocks in terminal section, except on the concrete anchor. For the Type B, non-blocked-out guardrail, no blocks are included.
5. Furnish hardware in the metric sizes shown. Equivalent US Customary sizes may be used when metric sizes are not available.
6. Dimensions without units are millimeters.

GUARDRAIL FLARE RATE TABLE

Design Speed (km/h)	Shy line offset (m)	Flare rate inside shy line (a:b)	Flare rate outside shy line (a:b)
100	2.5	26:1	14:1
80	2.0	21:1	11:1
60	1.5	16:1	8:1
50 or less	1.0	13:1	7:1

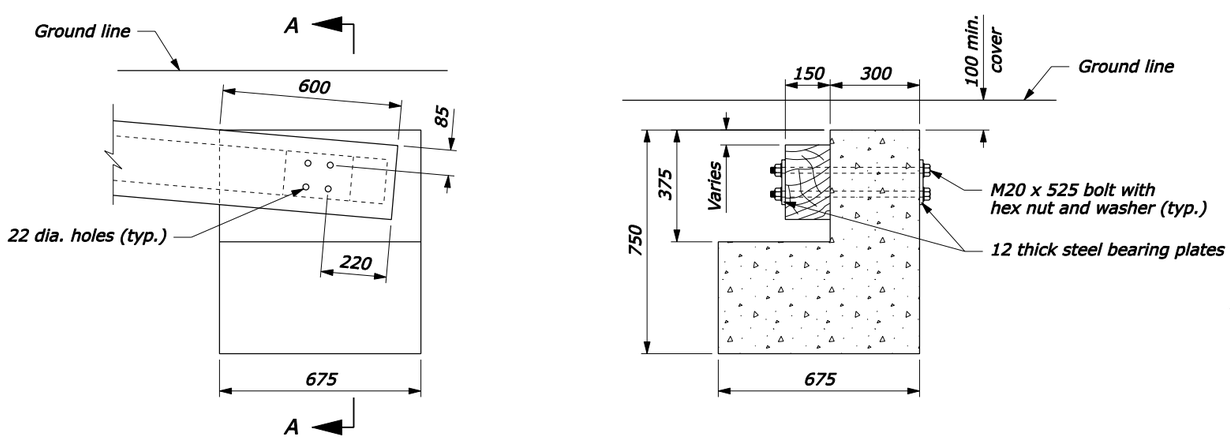

CONCRETE ANCHOR

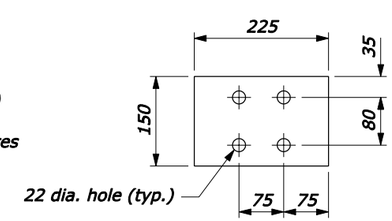

STEEL BEARING PLATE

NO SCALE

U.S. DEPARTMENT OF TRANSPORTATION
FEDERAL HIGHWAY ADMINISTRATION
FEDERAL LANDS HIGHWAY

METRIC STANDARD

STEEL-BACKED TIMBER GUARDRAIL TERMINAL SECTION TYPE SBT FAT-9

STANDARD APPROVED FOR USE 3/1996
REVISED: 6/2005

STANDARD
M617-61

16-Jun-2005 05:29 PM
F:\StanDraw\st61761.dgn [Metric]

STATE	PROJECT	SHEET NUMBER

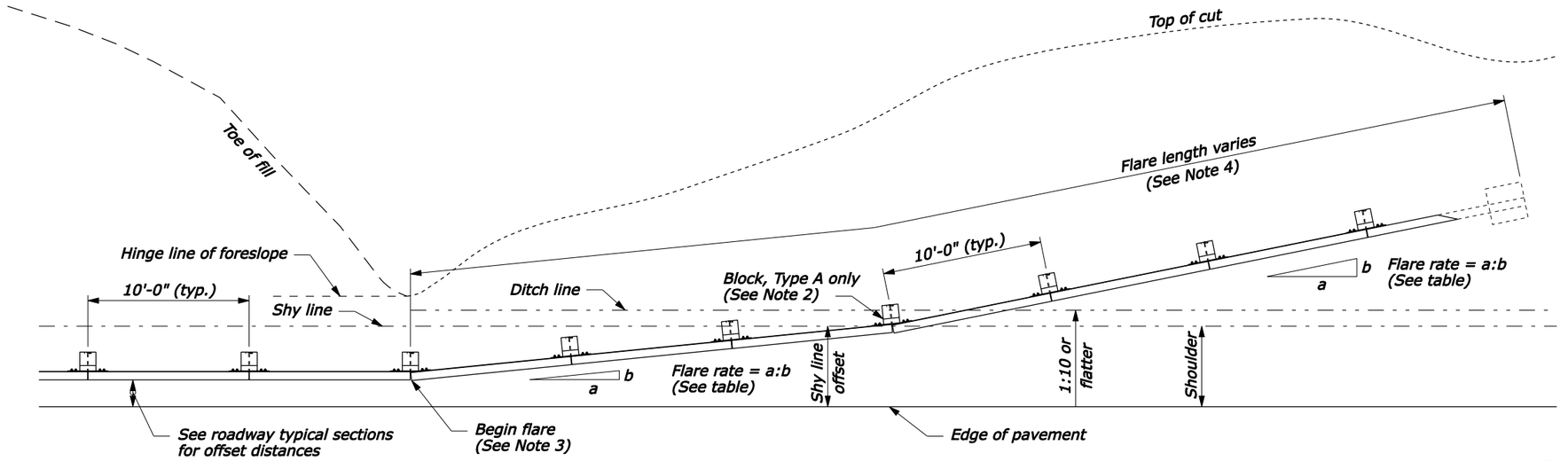

PLAN

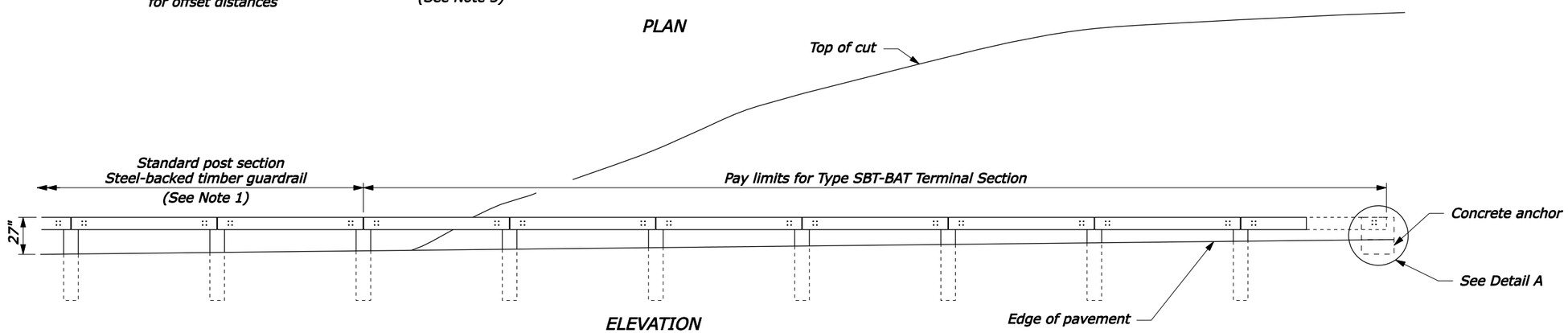

ELEVATION

APPROACH & DEPARTURE FLARE WITH BACK SLOPE ANCHOR TERMINAL (BAT)

NOTE:

1. See Standard 617-60, SBTA and SBTB for timber, structural steel, and hardware details.
2. On the Type A, blocked-out guardrail, include the blocks in the terminal section, except on the concrete anchor. For the Type B, non-blocked-out guardrail, no blocks are included.
3. Begin the cut flares at the nearest post to a transition point between fill and cut as directed by the CO.
4. Extend the flare into the cut until a minimum 1-foot cover is obtained over the guardrail end.

GUARDRAIL FLARE RATE TABLE

Design Speed (mph)	Shy line offset (ft)	Flare rate inside shy line (a:b)	Flare rate outside shy line (a:b)
60	8.0	26:1	14:1
50	6.5	21:1	11:1
40	5.0	16:1	8:1
30 and less	3.5	13:1	7:1

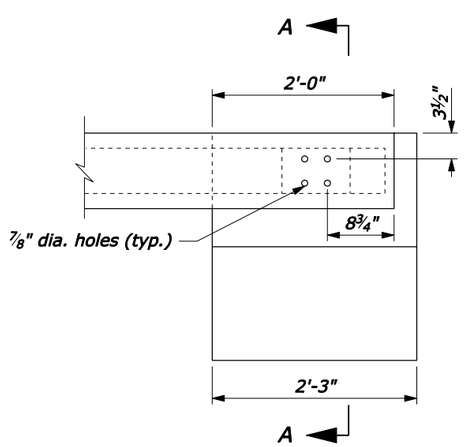

DETAIL A

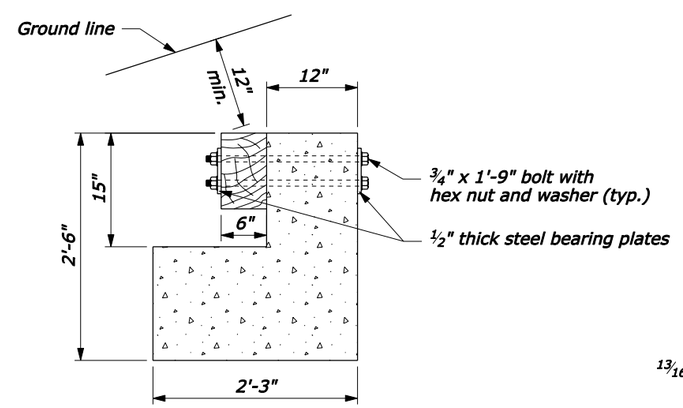

SECTION A-A

CONCRETE ANCHOR

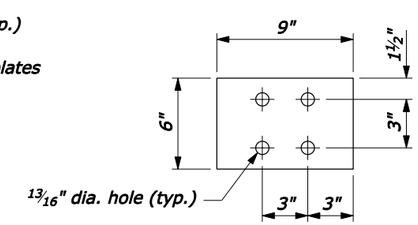

STEEL BEARING PLATE

NO SCALE

U.S. DEPARTMENT OF TRANSPORTATION
FEDERAL HIGHWAY ADMINISTRATION
FEDERAL LANDS HIGHWAY

U.S. CUSTOMARY STANDARD

STEEL-BACKED TIMBER GUARDRAIL TERMINAL SECTION TYPE SBT-BAT

STANDARD APPROVED FOR USE 3/1990
REVISED: 4/1994 6/2005

STANDARD 617-62

F:\StanDraw\st61762.dgn [US Customary] 16-Jun-2005 04:20 PM

STATE	PROJECT	SHEET NUMBER

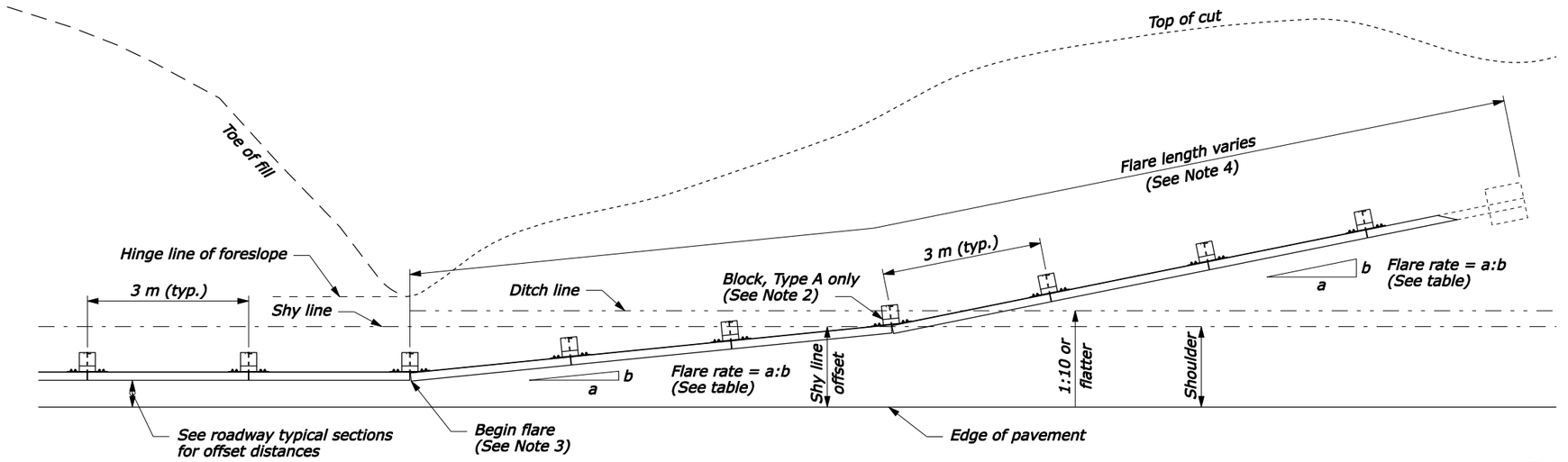

PLAN

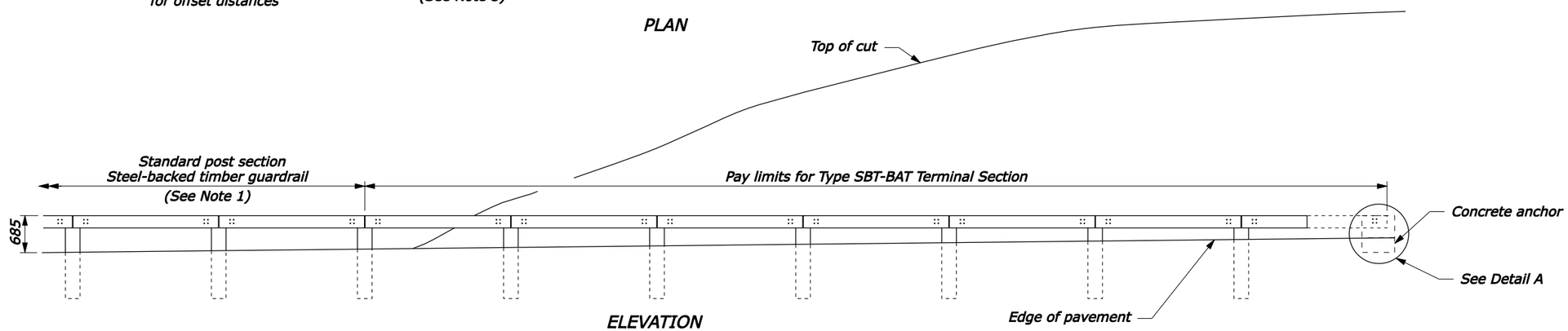

ELEVATION

APPROACH & DEPARTURE FLARE WITH BACK SLOPE ANCHOR TERMINAL (BAT)

NOTE:

1. See Standard M617-60, SBTA and SBTB for timber, structural steel, and hardware details.
2. On the Type A, blocked-out guardrail, include the blocks in the terminal section, except on the concrete anchor. For the Type B, non-blocked-out guardrail, no blocks are included.
3. Begin the cut flares at the nearest post to a transition point between fill and cut as directed by the CO.
4. Extend the flare into the cut until a minimum 300 mm cover is obtained over the guardrail end.
5. Furnish hardware in the metric sizes shown. Equivalent US Customary sizes may be used when metric sizes are not available.
6. Dimensions without units are millimeters.

GUARDRAIL FLARE RATE TABLE

Design Speed (km/h)	Shy line offset (m)	Flare rate inside shy line (a:b)	Flare rate outside shy line (a:b)
100	2.5	26:1	14:1
80	2.0	21:1	11:1
60	1.5	16:1	8:1
50 or less	1.0	13:1	7:1

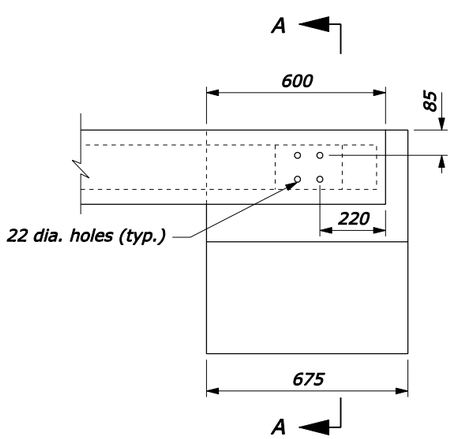

DETAIL A

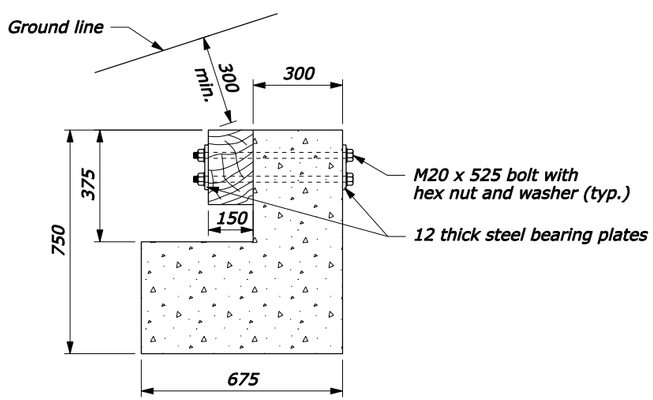

SECTION A-A

CONCRETE ANCHOR

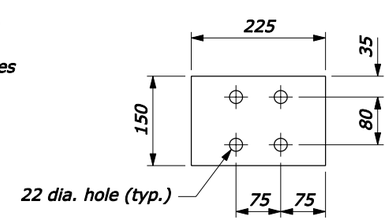

STEEL BEARING PLATE

NO SCALE

U.S. DEPARTMENT OF TRANSPORTATION
FEDERAL HIGHWAY ADMINISTRATION
FEDERAL LANDS HIGHWAY

METRIC STANDARD

STEEL-BACKED TIMBER GUARDRAIL TERMINAL SECTION TYPE SBT-BAT

STANDARD APPROVED FOR USE 3/1996
REVISED: 6/2005

STANDARD
M617-62

16-Jun-2005 03:59 PM
F:\StanDraw\st61762.dgn [Metric]

STATE	PROJECT	SHEET NUMBER

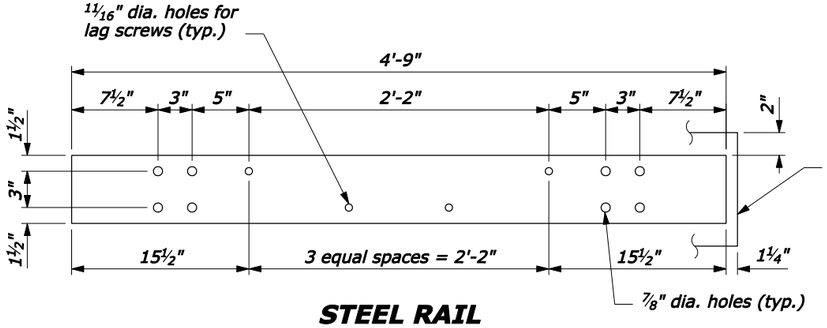

STEEL RAIL
6" x ⅜" x 4'-9"

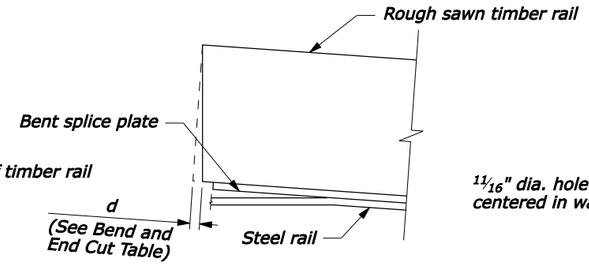

DETAIL A

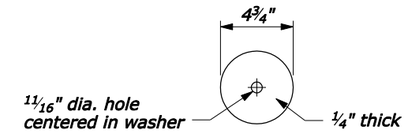

PLATE WASHER DETAIL

NOTE:

1. Use the Type A, blocked-out, system or the Type B, non-blocked-out, system as specified.
2. Use the weathering steel for all structural steel and fastener hardware.
3. Furnish shop bent splice plates. Use the minimum bend angle shown in the table below.
4. See Sheet 2 of 2 for Plan View Layout.

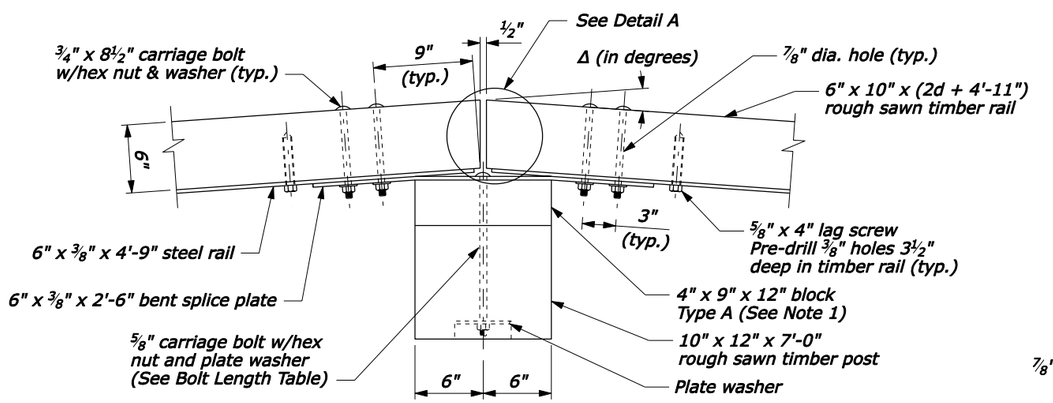

PLAN

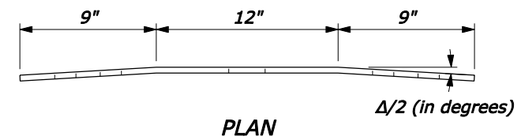

PLAN

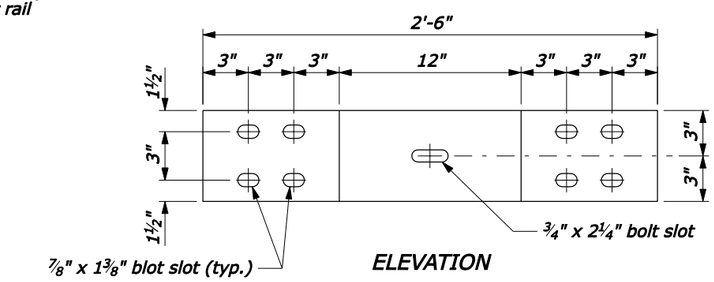

ELEVATION

BENT SPLICE PLATE
6" x ⅜" x 2'-6"

BEND AND END CUT TABLE		
Radius R ft	Δ/2 degrees	d in
20	7.18	¾
25	5.74	⅝
30	4.78	½
35	4.10	7/16
40	3.58	⅜
45	3.18	⅓
50	2.87	5/16
55	2.61	¼
60	2.39	¼
65	2.20	¼
70	2.05	¼
over 70	flat	0

BOLT LENGTH TABLE	
Type A (Block-out)	Type B (No Block-out)
15"	11"

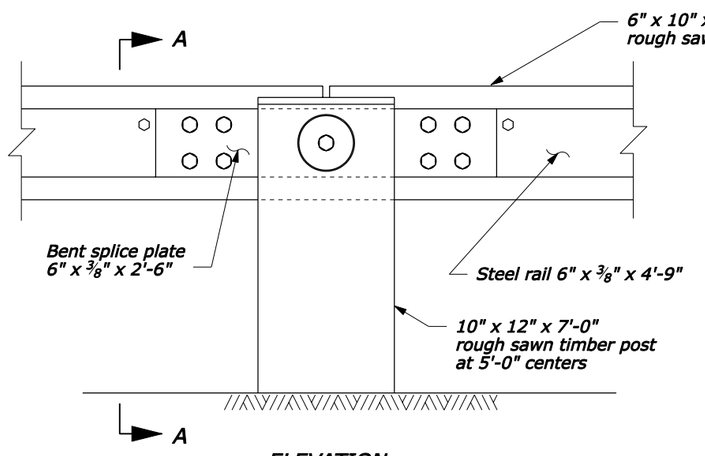

ELEVATION

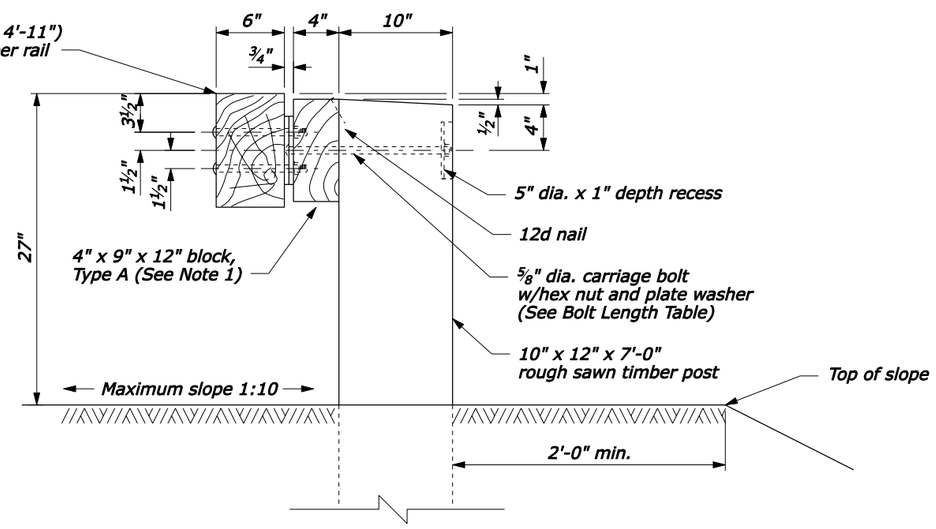

SECTION A-A

POST CONNECTION

NO SCALE

U.S. DEPARTMENT OF TRANSPORTATION
FEDERAL HIGHWAY ADMINISTRATION
FEDERAL LANDS HIGHWAY

U.S. CUSTOMARY STANDARD

STEEL-BACKED TIMBER GUARDRAIL AROUND CIRCULAR CURVES 70 FOOT RADIUS AND BELOW

Sheet 1 of 2

STANDARD APPROVED FOR USE 6/2005

REVISED:

STANDARD 617-63

16-Jun-2005 04:29 PM
F:\StanDraw\std1763.dgn [US Customary]

STATE	PROJECT	SHEET NUMBER

NOTE:

1. Δ is the central angle which subtends a 5'-0" chord.
2. R is measured from the center of the circle to the back surface of the rough sawn timber rail.

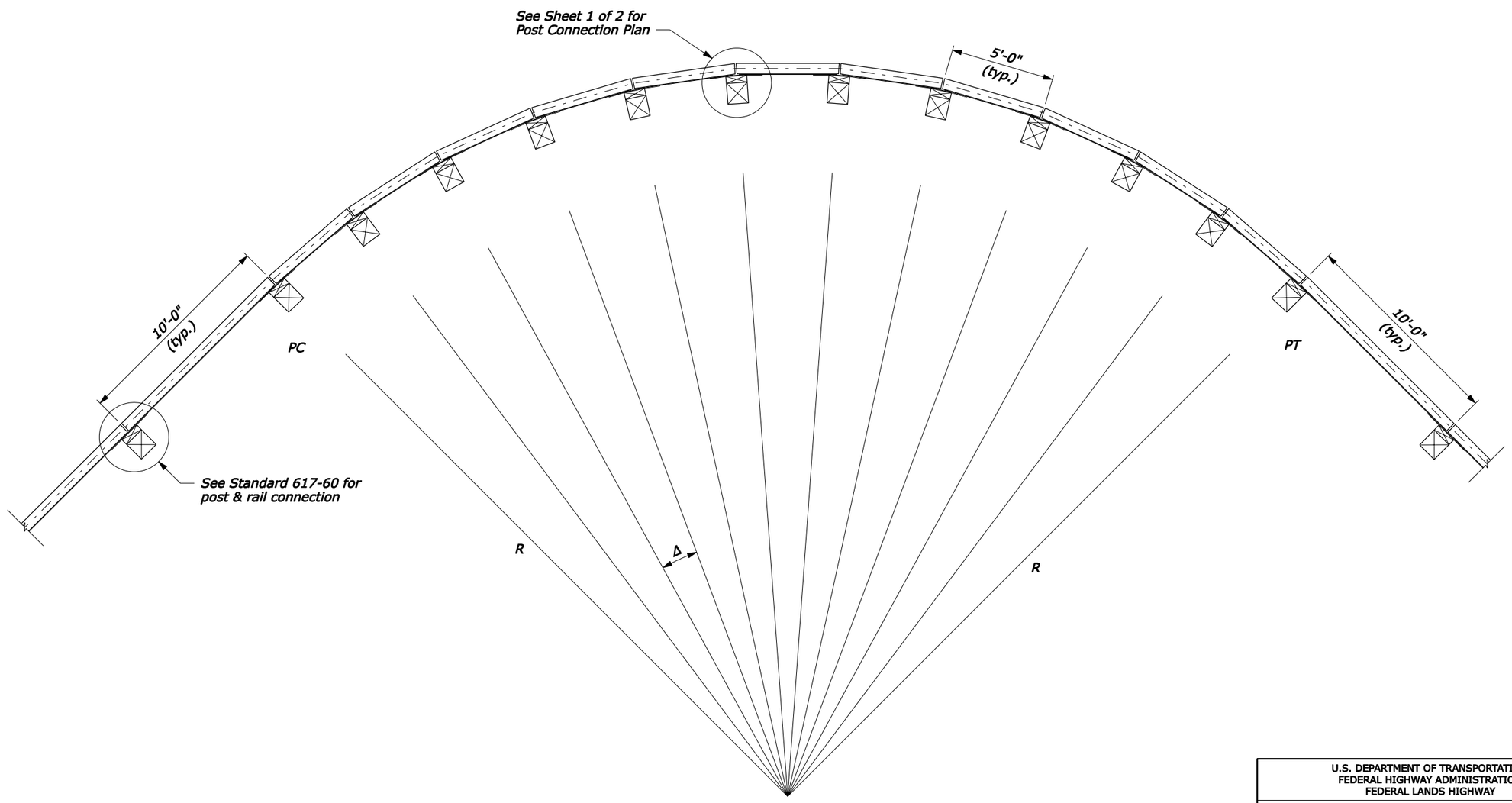

PLAN VIEW LAYOUT

NO SCALE

U.S. DEPARTMENT OF TRANSPORTATION
FEDERAL HIGHWAY ADMINISTRATION
FEDERAL LANDS HIGHWAY

U.S. CUSTOMARY STANDARD

STEEL-BACKED TIMBER GUARDRAIL AROUND CIRCULAR CURVES 70 FOOT RADIUS AND BELOW

Sheet 2 of 2

STANDARD APPROVED FOR USE 6/2005

REVISED:

STANDARD 617-63

16-Jun-2005 04:29 PM

F:\StanDraw\st61763.dgn [US Customary]

STATE	PROJECT	SHEET NUMBER

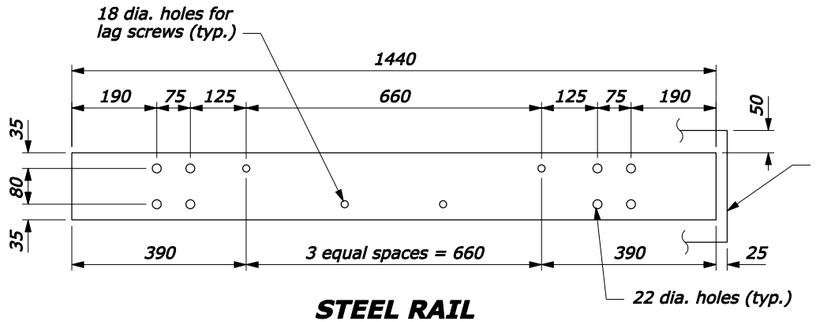

STEEL RAIL
150 x 10 x 1440

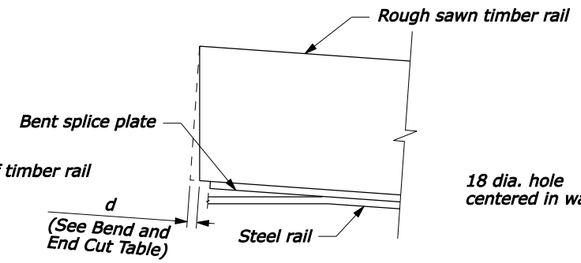

DETAIL A

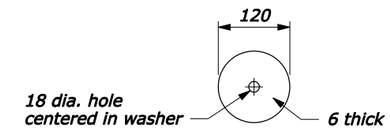

PLATE WASHER DETAIL

NOTE:

1. Use the Type A, blocked-out, system or the Type B, non-blocked-out, system as specified.
2. Use the weathering steel for all structural steel and fastener hardware.
3. Furnish shop bent splice plates. Use the minimum bend angle shown in the table below.
4. See Sheet 2 of 2 for Plan View Layout.
5. Furnish hardware in the metric sizes shown. Equivalent US Customary sizes may be used when metric sizes are not available.
6. Dimensions without units are millimeters.

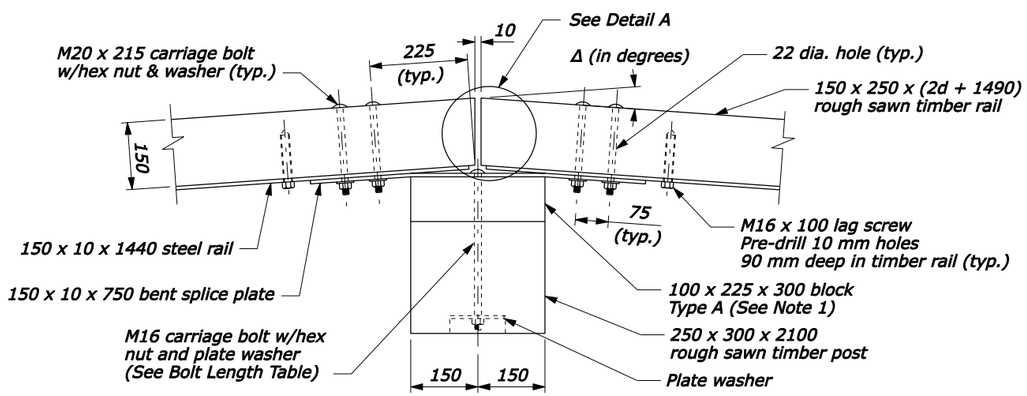

PLAN

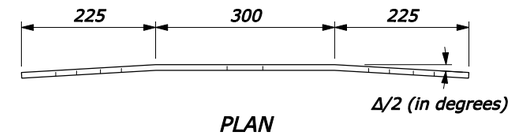

PLAN

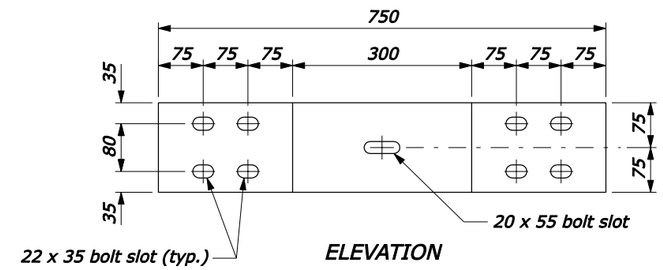

ELEVATION

BENT SPLICE PLATE
150 x 10 x 750

BEND AND END CUT TABLE		
Radius R meters	Δ/2 degrees	d mm
5	8.63	23
6	7.18	19
8	5.38	14
10	4.30	11
12	3.58	9
14	3.07	8
16	2.69	7
18	2.39	6
20	2.15	6
22	1.95	5
over 22	flat	0

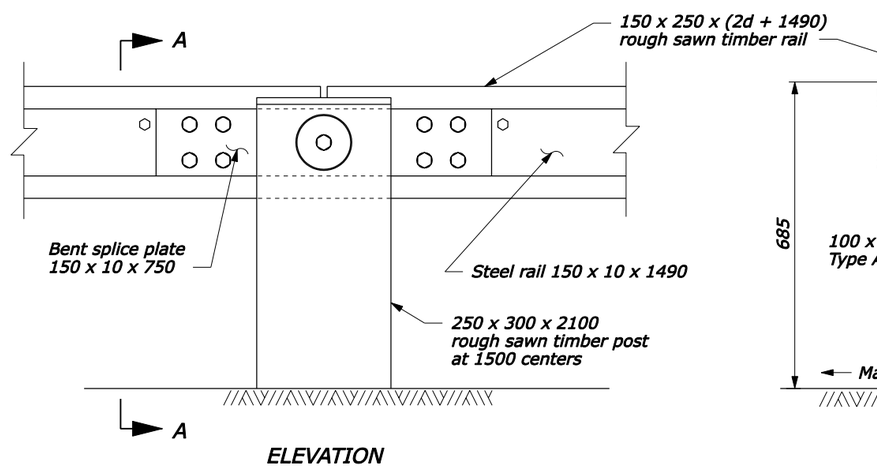

ELEVATION

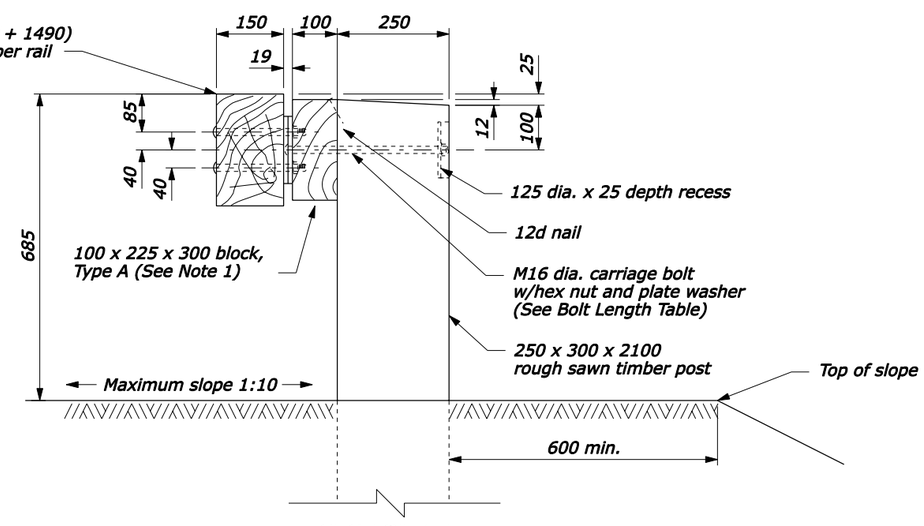

SECTION A-A

POST CONNECTION

BOLT LENGTH TABLE	
Type A (Block-out)	Type B (No Block-out)
375	275

NO SCALE

U.S. DEPARTMENT OF TRANSPORTATION
FEDERAL HIGHWAY ADMINISTRATION
FEDERAL LANDS HIGHWAY

METRIC STANDARD

STEEL-BACKED TIMBER GUARDRAIL AROUND CIRCULAR CURVES 22 m RADIUS AND BELOW

Sheet 1 of 2

STANDARD APPROVED FOR USE 3/1996
REVISED: 6/2005

STANDARD
M617-63

16-Jun-2005 04:25 PM
F:\StanDraw\st61763.dgn [Metric]

STATE	PROJECT	SHEET NUMBER

NOTE:

1. Δ is the central angle which subtends a 1500 mm chord.
2. R is measured from the center of the circle to the back surface of the rough sawn timber rail.
3. Dimensions without units are millimeters.

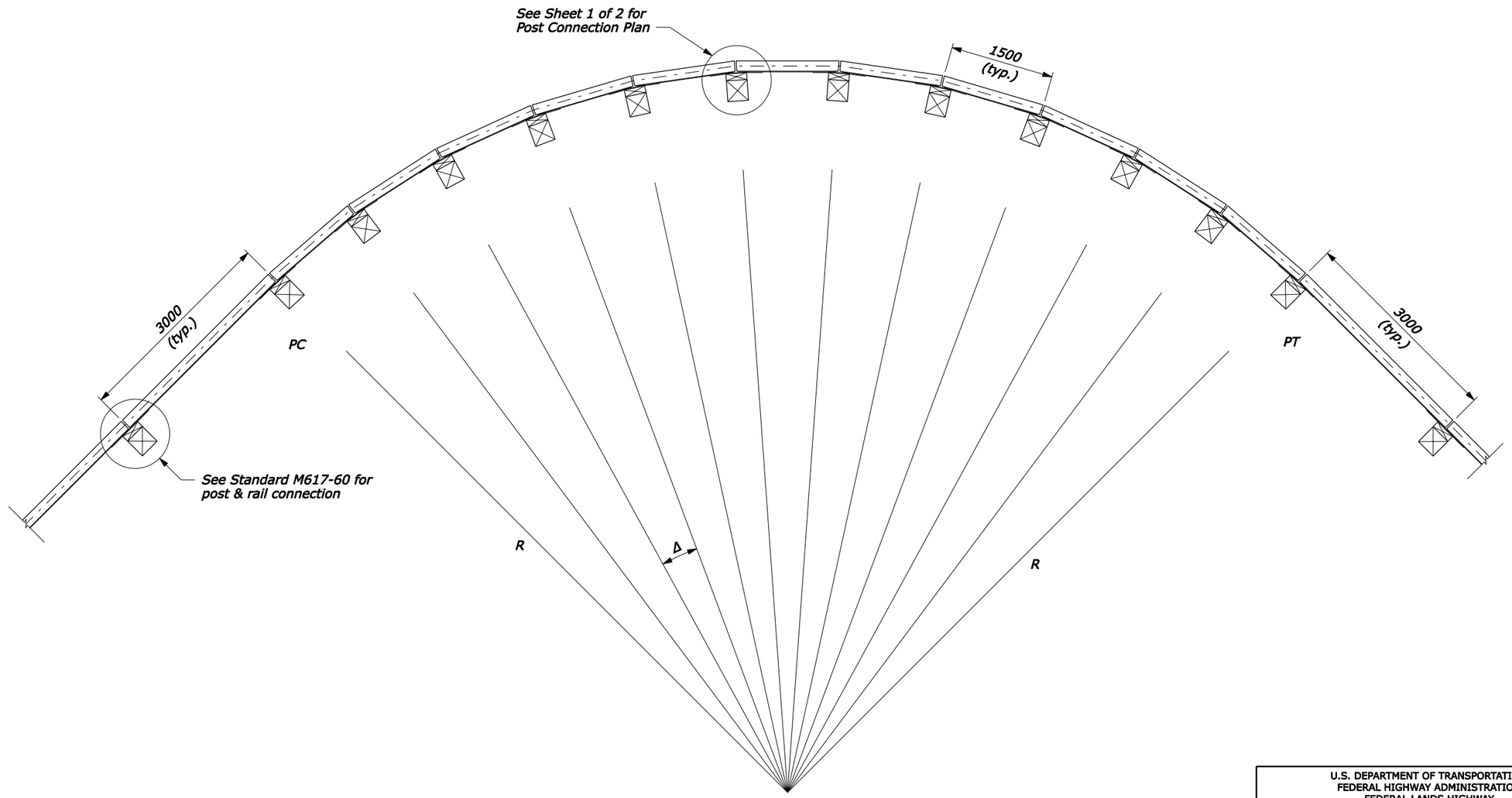

PLAN VIEW LAYOUT

NO SCALE

U.S. DEPARTMENT OF TRANSPORTATION
FEDERAL HIGHWAY ADMINISTRATION
FEDERAL LANDS HIGHWAY

METRIC STANDARD

STEEL-BACKED TIMBER GUARDRAIL AROUND CIRCULAR CURVES 22 m RADIUS AND BELOW

Sheet 2 of 2

STANDARD APPROVED FOR USE 3/1996

REVISED: 6/2005

STANDARD
M617-63

F:\StanDraw\st61763.dgn [Metric] 16-Jun-2005 04:26 PM

STATE	PROJECT	SHEET NUMBER

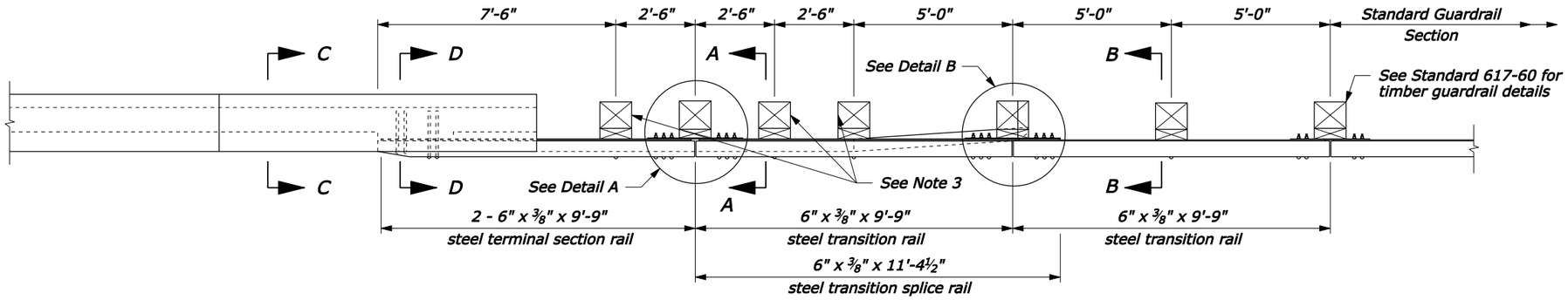

PLAN

NOTE:

1. See the following sheets for Sections A-A through C-C, steel rail layouts, and other details.
2. Use weathering steel for all structural steel land fastener hardware.
3. For posts 1, 3, and 4, use an 8" x 9" x 12" block for the blockout, and a 5/8" x 2'-1 1/2" carriage bolt with hex nut and plate washer.

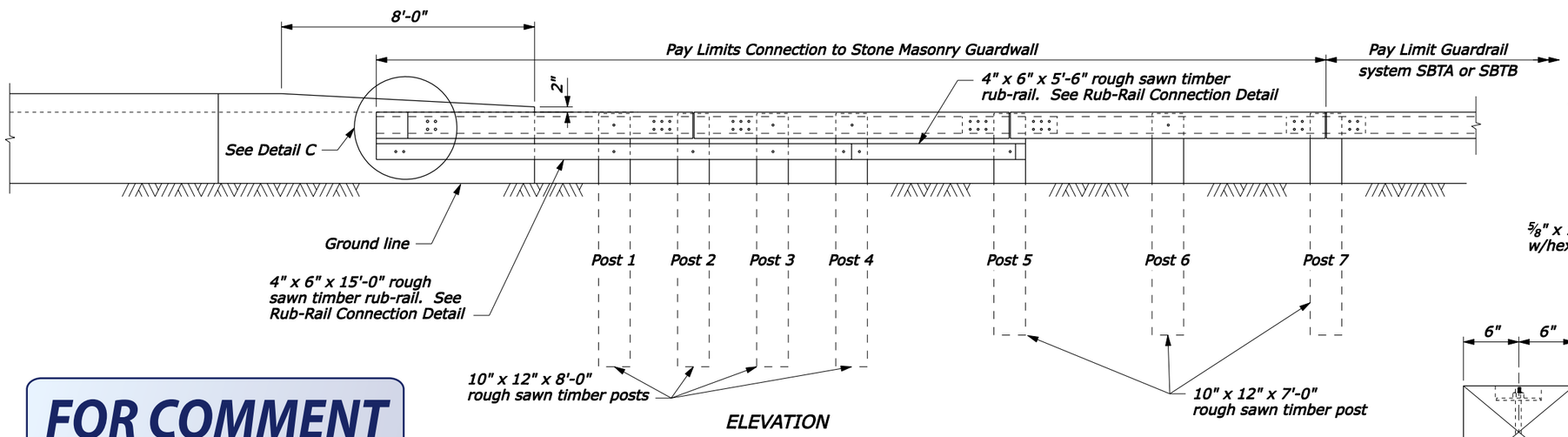

ELEVATION

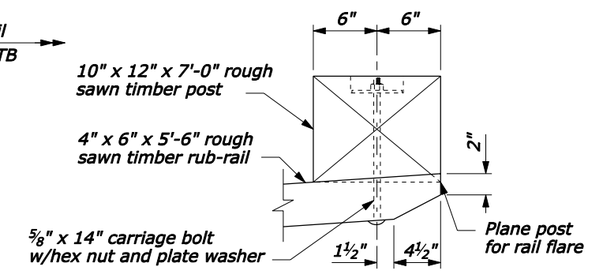

POST 5

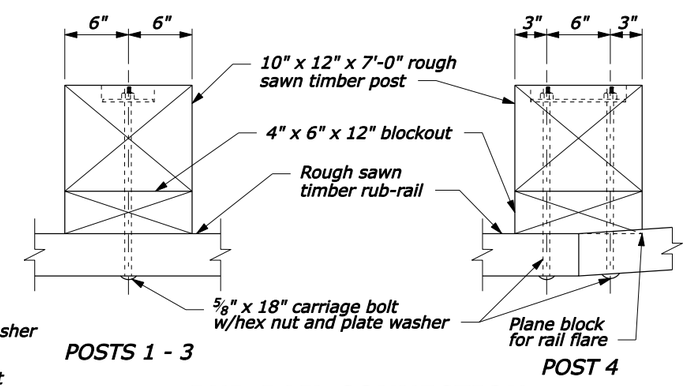

POSTS 1 - 3

POST 4

RUB-RAIL CONNECTION

FOR COMMENT

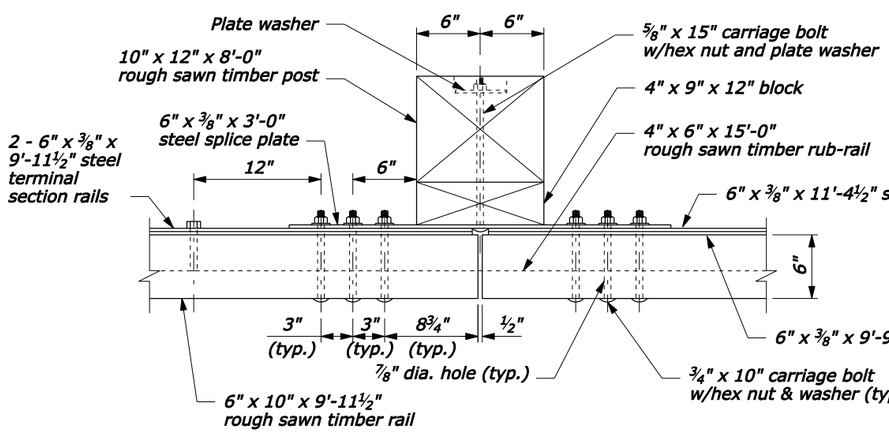

DETAIL A

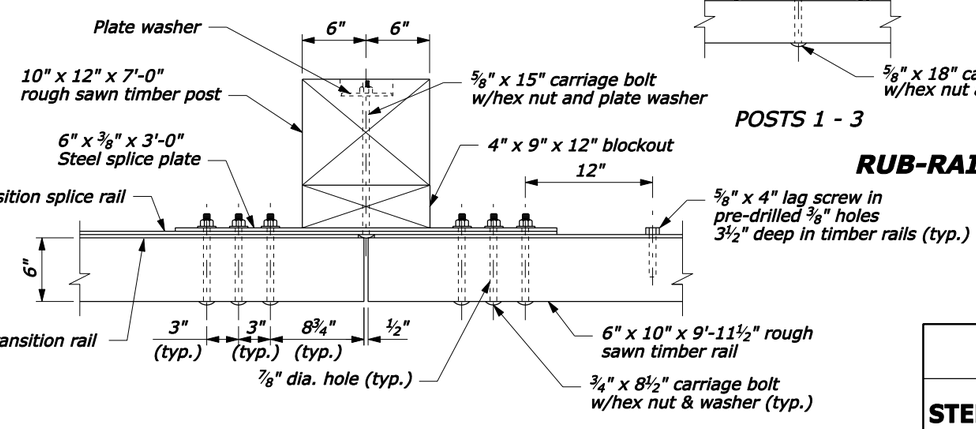

DETAIL B

POST CONNECTION

NO SCALE

U.S. DEPARTMENT OF TRANSPORTATION
FEDERAL HIGHWAY ADMINISTRATION
FEDERAL LANDS HIGHWAY

U.S. CUSTOMARY STANDARD

STEEL-BACKED TIMBER GUARDRAIL TL-2 CONNECTION TO STONE MASONRY GUARDWALL

Sheet 1 of 3

STANDARD APPROVED FOR USE --/----

REVISED:
DRAFT: 1/2005

STANDARD 617-64

F:\StanDraw\Draft\V8\st61764.dgn [US Customary] 14-Apr-2005 02:43 PM

STATE	PROJECT	SHEET NUMBER

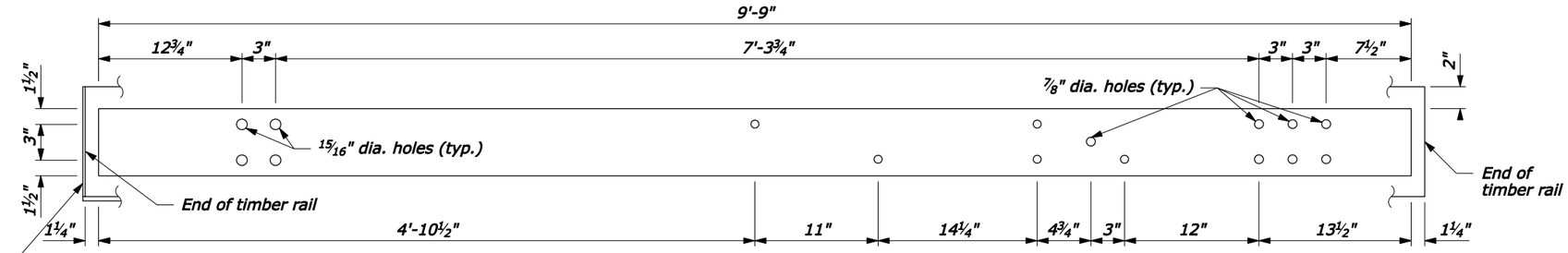

TERMINAL SECTION RAIL
6" x ⅜" x 9'-9"

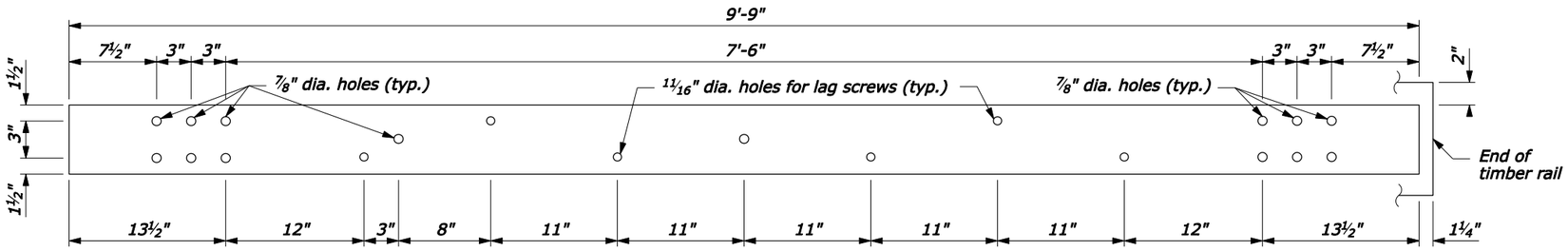

TRANSITION RAIL
6" x ⅜" x 9'-9"

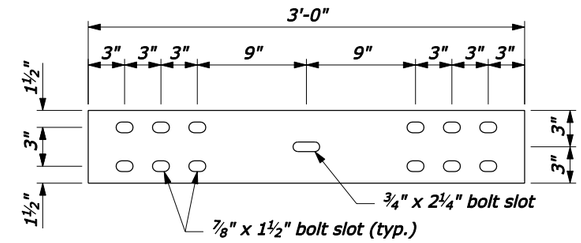

SPLICE PLATE
6" x ⅜" x 3'-0"

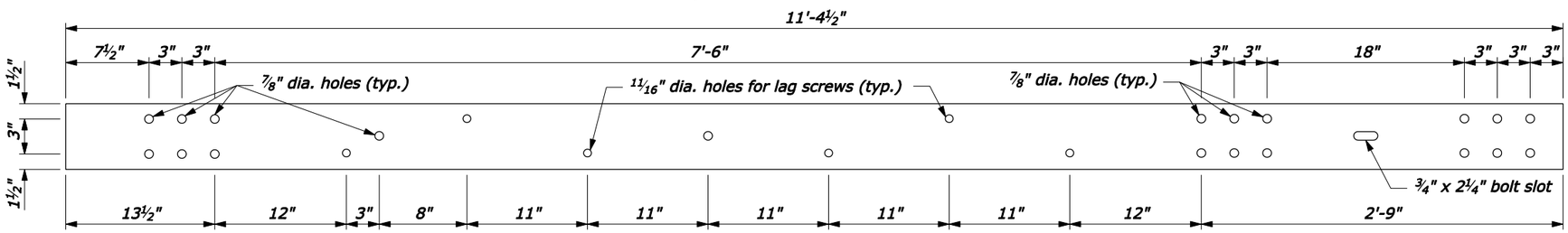

TRANSITION SPLICE RAIL
6" x ⅜" x 11'-4½"

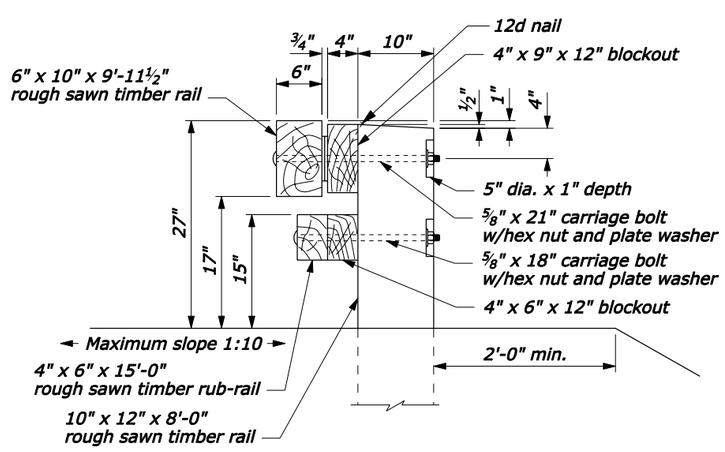

SECTION A-A

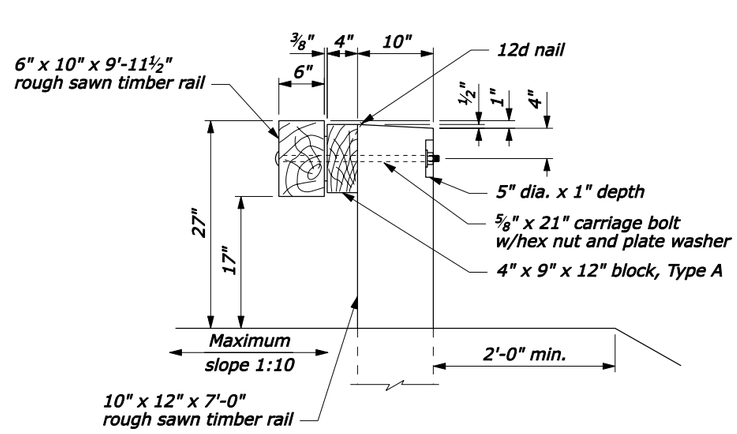

SECTION B-B

NO SCALE

NOTE:

1. Pre-drill ¾" holes in blocks outs and posts.

FOR COMMENT

U.S. DEPARTMENT OF TRANSPORTATION
FEDERAL HIGHWAY ADMINISTRATION
FEDERAL LANDS HIGHWAY

U.S. CUSTOMARY STANDARD

STEEL-BACKED TIMBER GUARDRAIL TL-2 CONNECTION TO STONE MASONRY GUARDWALL

Sheet 2 of 3

STANDARD APPROVED FOR USE --/----

REVISED:
DRAFT: 1/2005

STANDARD
617-64

F:\StanDraw\Draft\V8\st61764.dgn [US Customary] 19-Jan-2005 10:35 AM

STATE	PROJECT	SHEET NUMBER

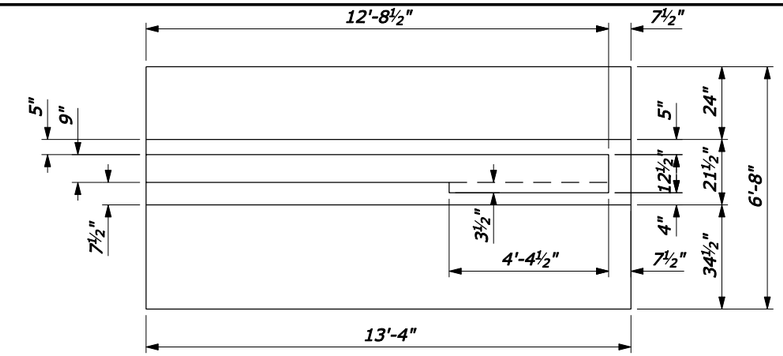

PLAN

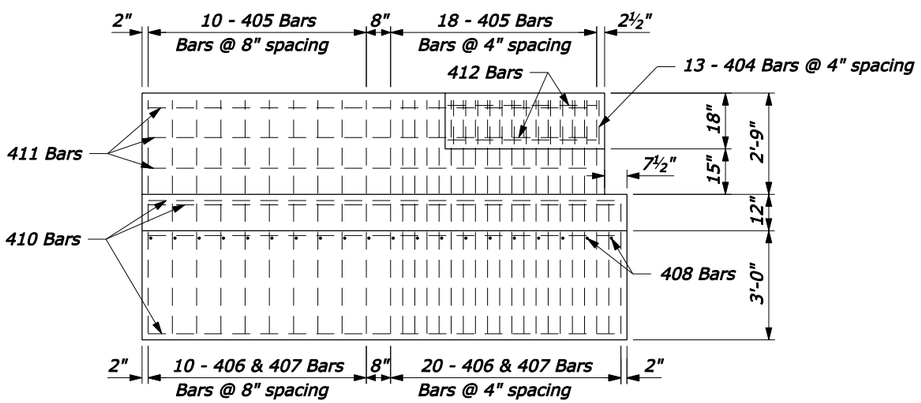

ELEVATION

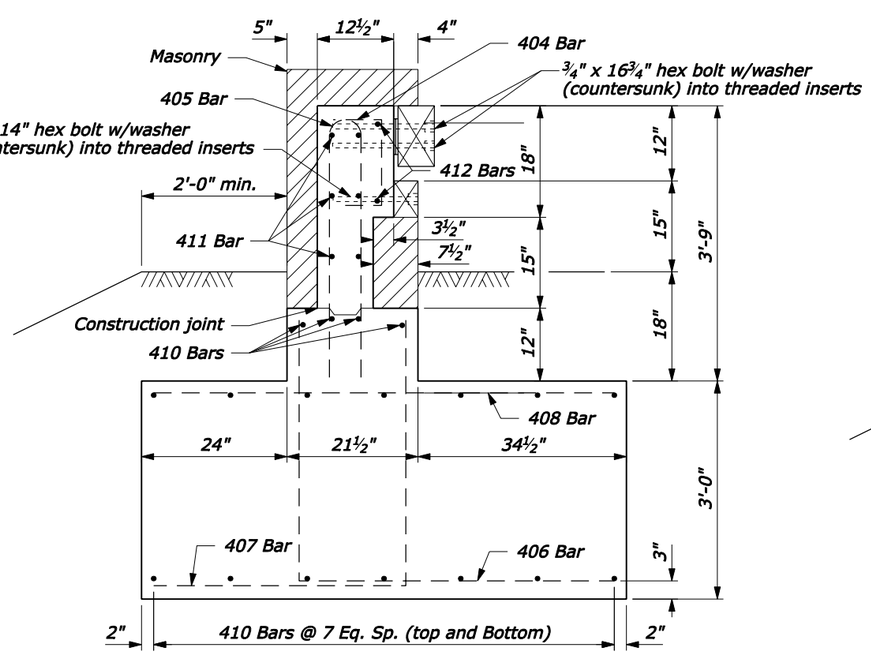

SECTION D-D

PARAPET END BLOCK

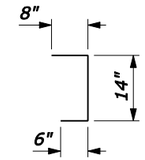

404 Bars

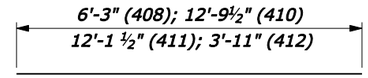

408, 410, 411, and 412 Bars

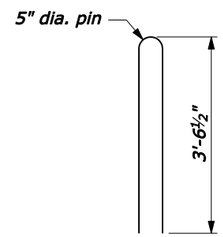

405 Bars

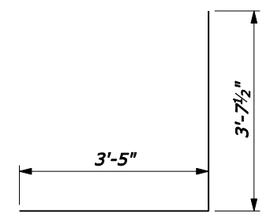

405 Bars

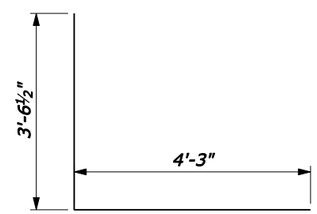

406 Bars

BAR DETAILS

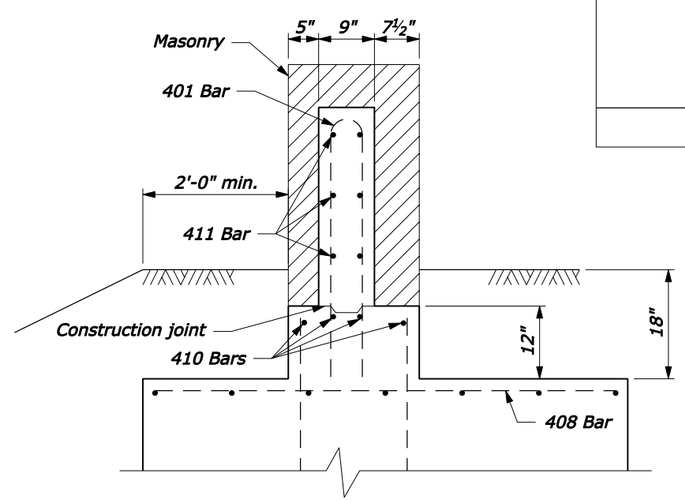

SECTION C-C

NOTE:

1. CONCRETE: Structural concrete Class A(AE), with a specified minimum 28-day compressive strength F'c=30 MPa. Vibrate all concrete. Chamfer exposed edges ¾" unless otherwise shown. Do not use calcium chloride additives in the concrete.
2. REINFORCING STEEL: Reinforcing steel Grade 420 (ASTM A615M-96a, Grade 420) deformed billet steel bars conforming to AASHTO M31M. The minimum concrete covering to the face of any bar is 2" unless otherwise shown. All bars are US Customary size #5.
3. Construct footing against undisturbed material or backfill with well compacted granular material.

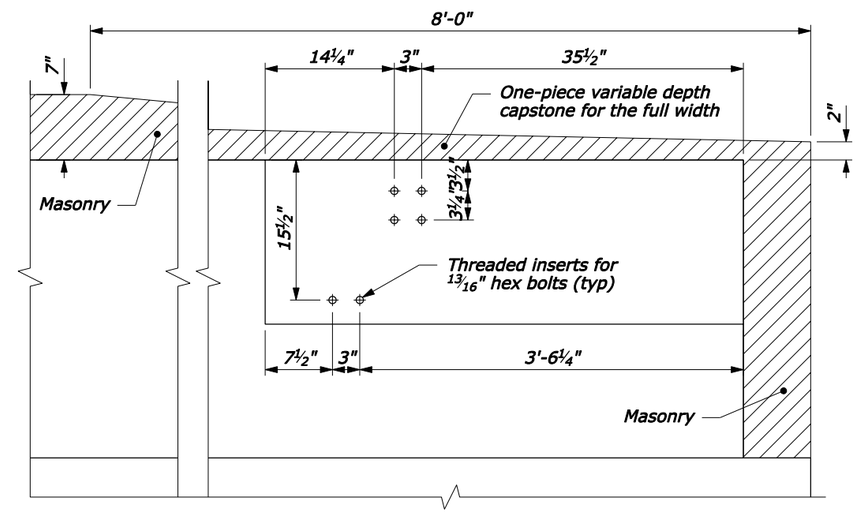

DETAIL C

FOR COMMENT

NO SCALE

U.S. DEPARTMENT OF TRANSPORTATION
FEDERAL HIGHWAY ADMINISTRATION
FEDERAL LANDS HIGHWAY

U.S. CUSTOMARY STANDARD

STEEL-BACKED TIMBER GUARDRAIL TL-2 CONNECTION TO STONE MASONRY GUARDWALL

Sheet 3 of 3

STANDARD APPROVED FOR USE --/----

REVISED:
DRAFT: 1/2005

STANDARD 617-64

F:\StanDraw\Draft\V8\st61764.dgn [US Customary] 19-Jan-2005 10:35 AM

STATE	PROJECT	SHEET NUMBER

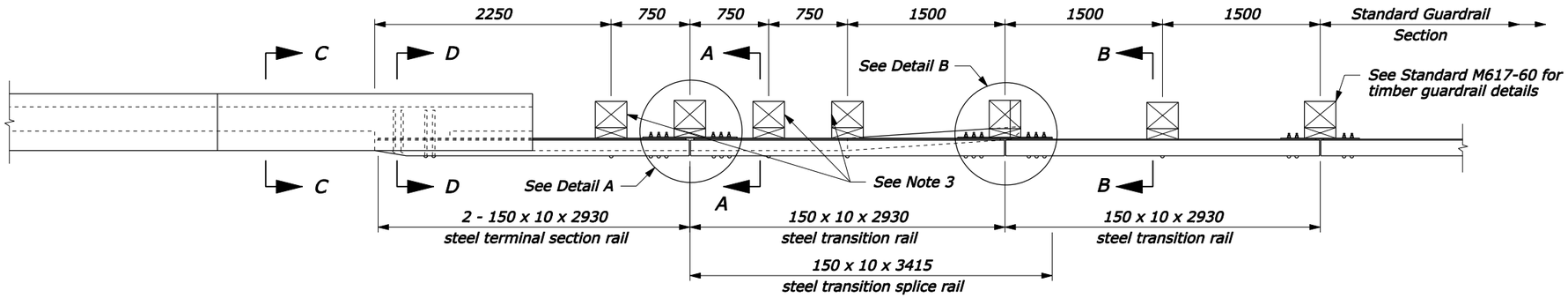

PLAN

NOTE:

1. See the following sheets for Sections A-A through C-C, steel rail layouts, and other details.
2. Use weathering steel for all structural steel land fastener hardware.
3. For posts 1, 3, and 4, use a 200 x 225 x 300 mm block for the blockout, and an M16 x 650 mm carriage bolt with hex nut and plate washer.
4. Furnish hardware in the metric sizes shown. Equivalent US Customary sizes may be used when metric sizes are not available.
5. Dimensions without units are millimeters.

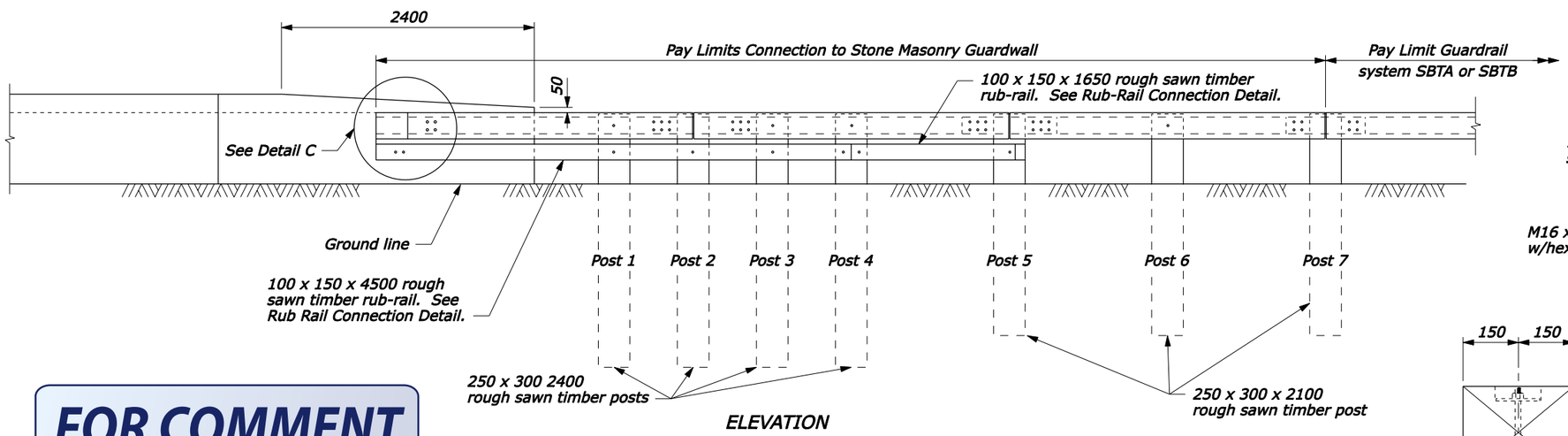

ELEVATION

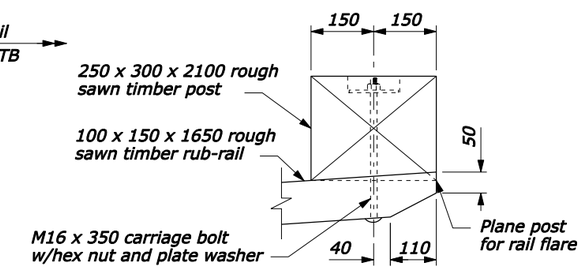

POST 5

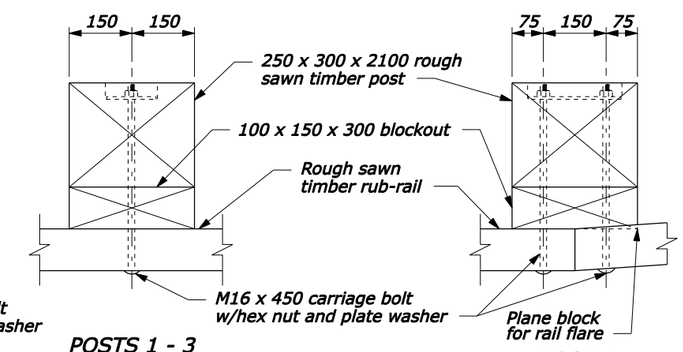

POSTS 1 - 3

POST 4

RUB-RAIL CONNECTION

FOR COMMENT

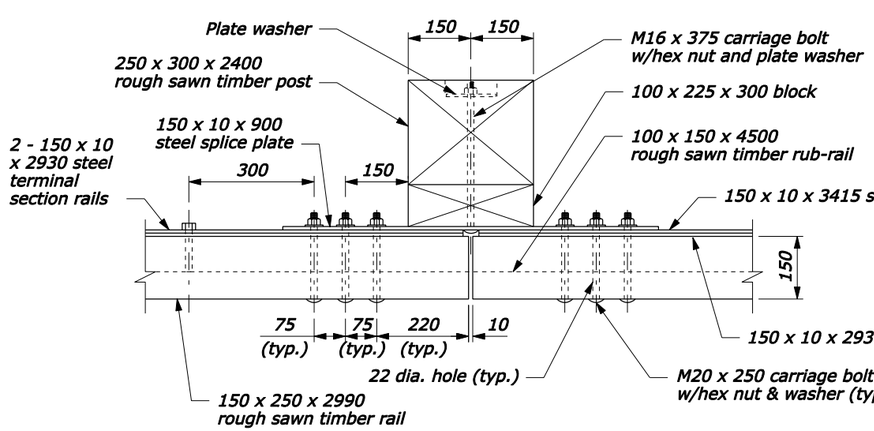

DETAIL A

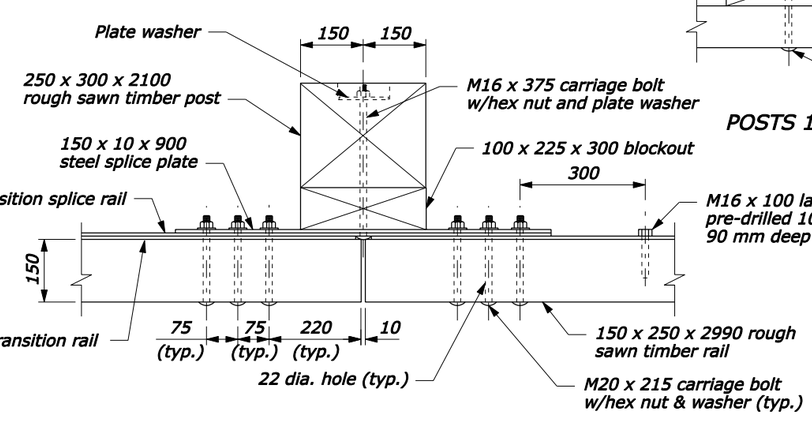

DETAIL B

POST CONNECTION

NO SCALE

U.S. DEPARTMENT OF TRANSPORTATION
FEDERAL HIGHWAY ADMINISTRATION
FEDERAL LANDS HIGHWAY

METRIC STANDARD

STEEL-BACKED TIMBER GUARDRAIL TL-2 CONNECTION TO STONE MASONRY GUARDWALL

Sheet 1 of 3

STANDARD APPROVED FOR USE --/----

REVISED:
DRAFT: 1/2005

STANDARD M617-64

14-Apr-2005 02:42 PM

F:\StanDraw\Draft\V8\st61764.dgn [Metric]

STATE	PROJECT	SHEET NUMBER

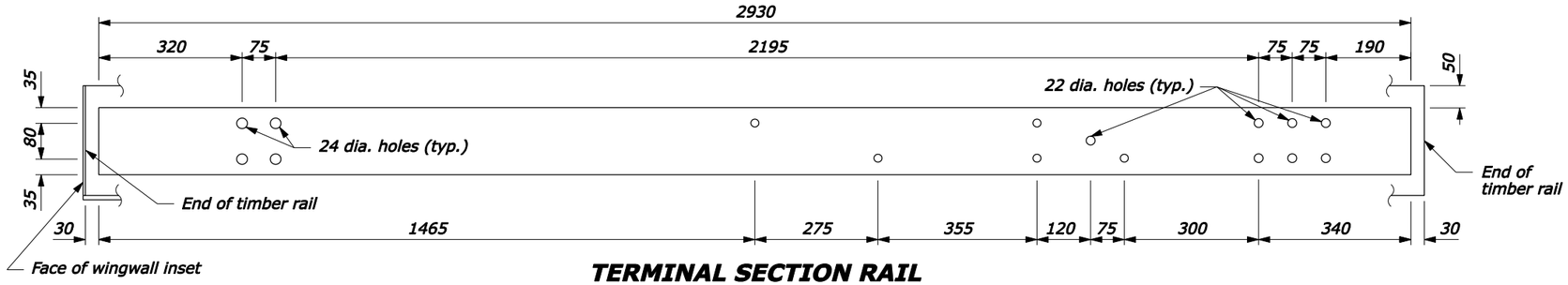

TERMINAL SECTION RAIL
150 x 10 x 2930

NOTE:

1. Pre-drill 18 mm holes in blocks outs and posts.
2. Furnish hardware in the metric sizes shown. Equivalent US Customary sizes may be used when metric sizes are not available.
3. Dimensions without units are millimeters.

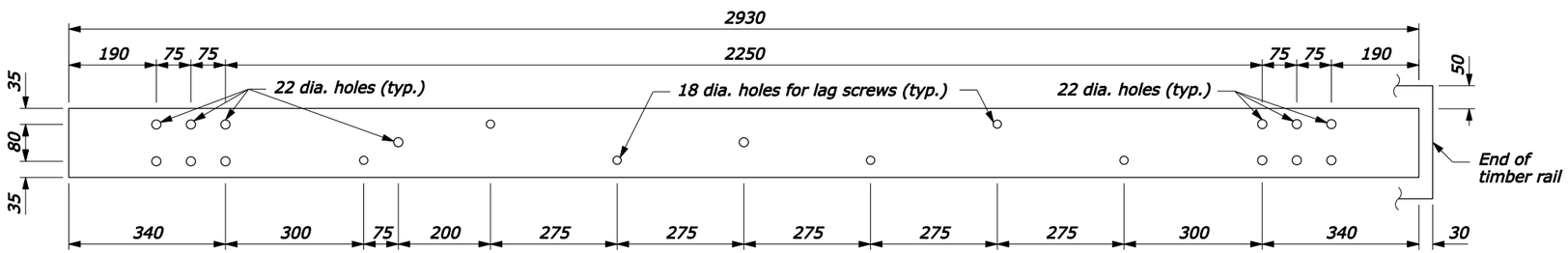

TRANSITION RAIL
150 x 10 x 2930

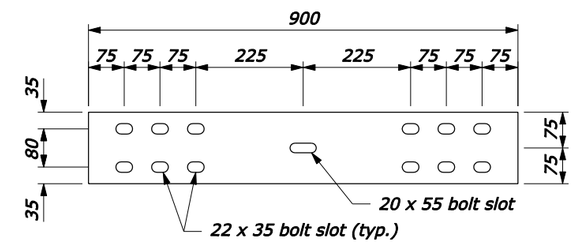

SPLICE PLATE
150 x 10 x 900

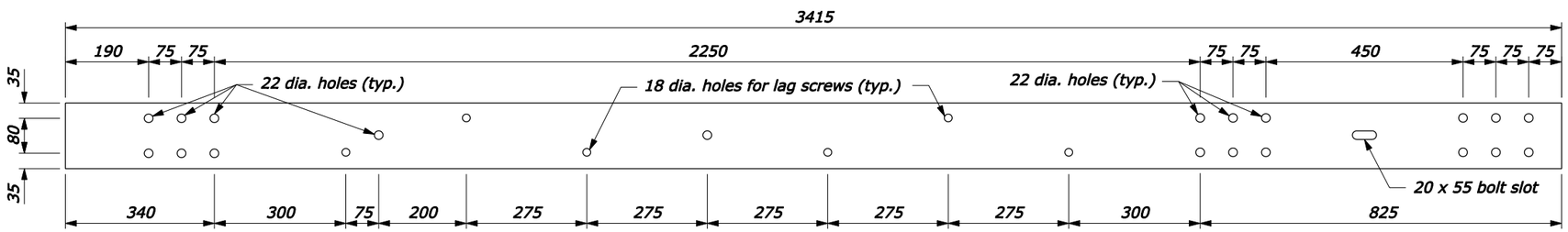

TRANSITION SPLICE RAIL
150 x 10 x 3415

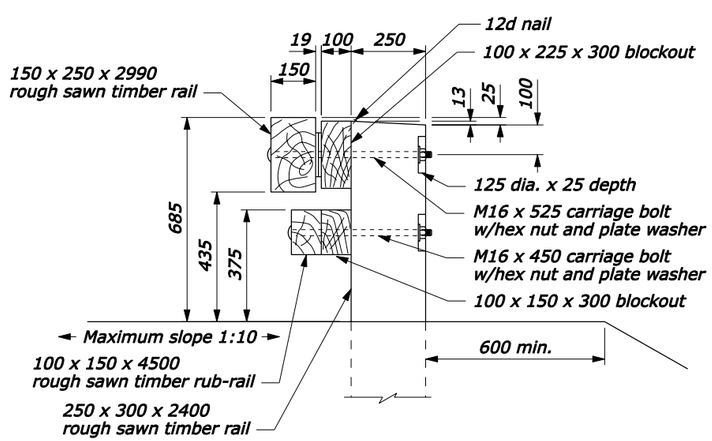

SECTION A-A

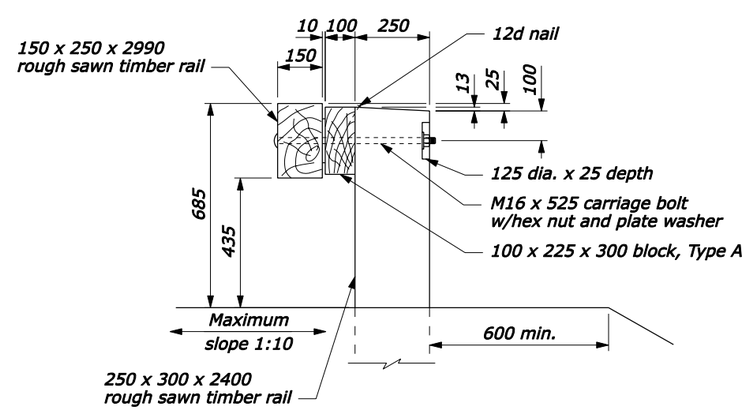

SECTION B-B

FOR COMMENT

NO SCALE

U.S. DEPARTMENT OF TRANSPORTATION
FEDERAL HIGHWAY ADMINISTRATION
FEDERAL LANDS HIGHWAY

METRIC STANDARD

STEEL-BACKED TIMBER GUARDRAIL TL-2 CONNECTION TO STONE MASONRY GUARDWALL

Sheet 2 of 3

STANDARD APPROVED FOR USE --/----

REVISED:
DRAFT: 1/2005

STANDARD
M617-64

F:\StanDraw\Draft\V8\st61764.dgn [Metric] 19-Jan-2005 10:33 AM

STATE	PROJECT	SHEET NUMBER

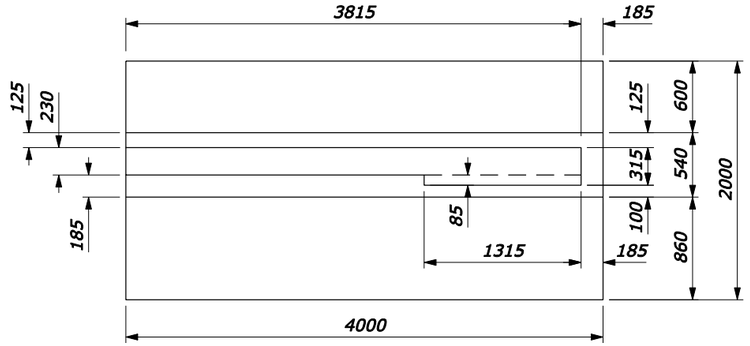

PLAN

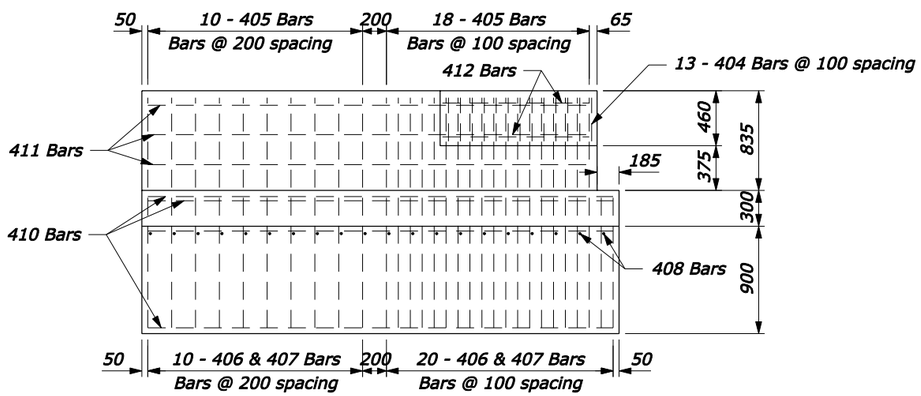

ELEVATION

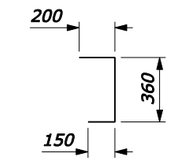

404 Bars

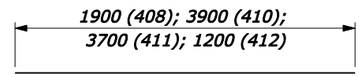

408, 410, 411, and 412 Bars

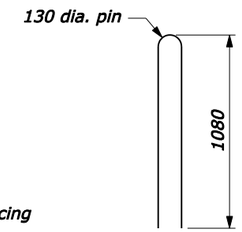

405 Bars

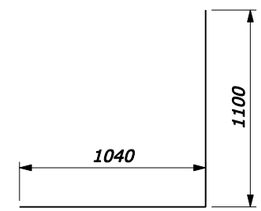

405 Bars

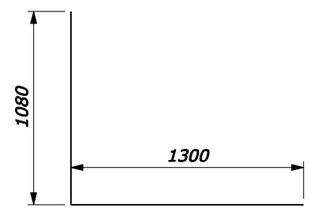

406 Bars

BAR DETAILS

NOTE:

1. CONCRETE: Structural concrete Class A(AE), with a specified minimum 28-day compressive strength F'c=30 MPa. Vibrate all concrete. Chamfer exposed edges 20 mm unless otherwise shown. Do not use calcium chloride additives in the concrete.
2. REINFORCING STEEL: Reinforcing steel Grade 420 (ASTM A615M-96a, Grade 420) deformed billet steel bars conforming to AASHTO M31M. The minimum concrete covering to the face of any bar is 50 mm unless otherwise shown. All bars are Metric size #16.
3. Construct footing against undisturbed material or backfill with well compacted granular material.
4. Dimensions without units are millimeters.

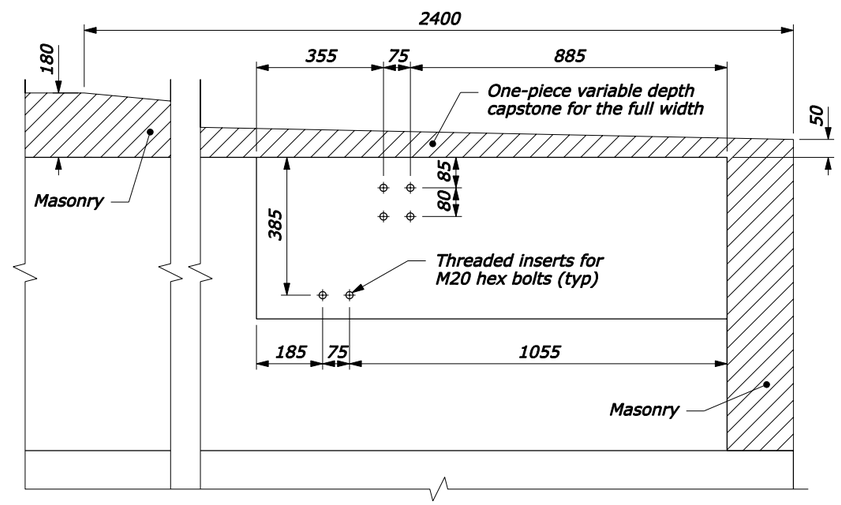

DETAIL C

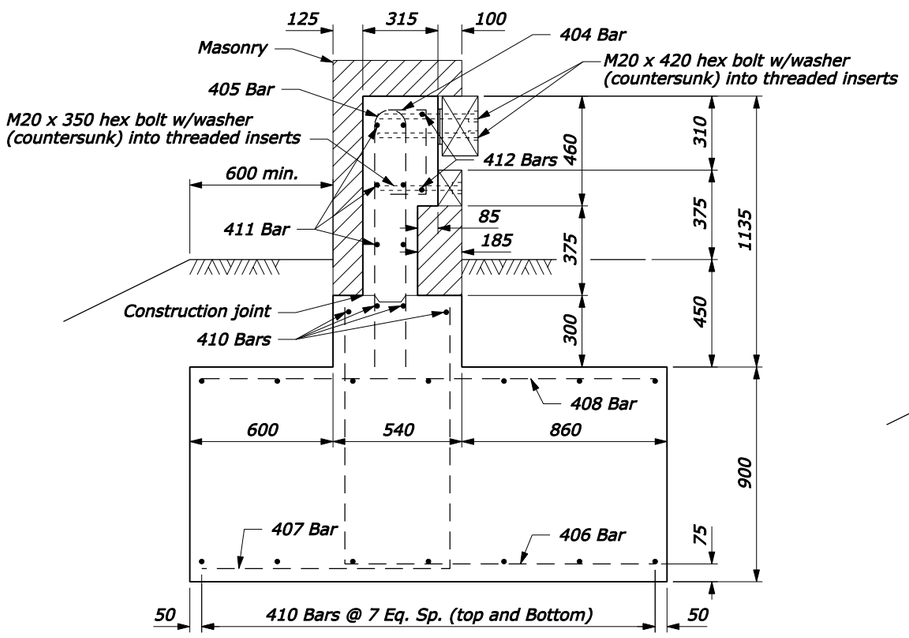

SECTION D-D

PARAPET END BLOCK

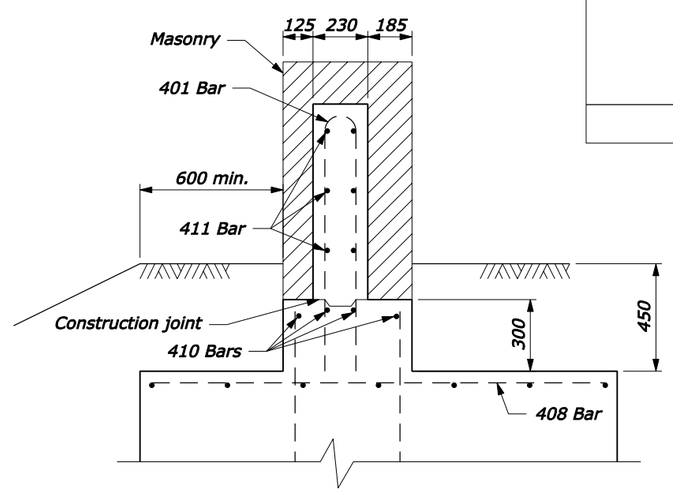

SECTION C-C

FOR COMMENT

NO SCALE

U.S. DEPARTMENT OF TRANSPORTATION
FEDERAL HIGHWAY ADMINISTRATION
FEDERAL LANDS HIGHWAY

METRIC STANDARD

STEEL-BACKED TIMBER GUARDRAIL TL-2 CONNECTION TO STONE MASONRY GUARDWALL

Sheet 3 of 3

STANDARD APPROVED FOR USE --/----

REVISED:

DRAFT: 1/2005

STANDARD M617-64

F:\StanDraw\Draft\V8\at61764.dgn [Metric] 19-Jan-2005 10:34 AM

STATE	PROJECT	SHEET NUMBER

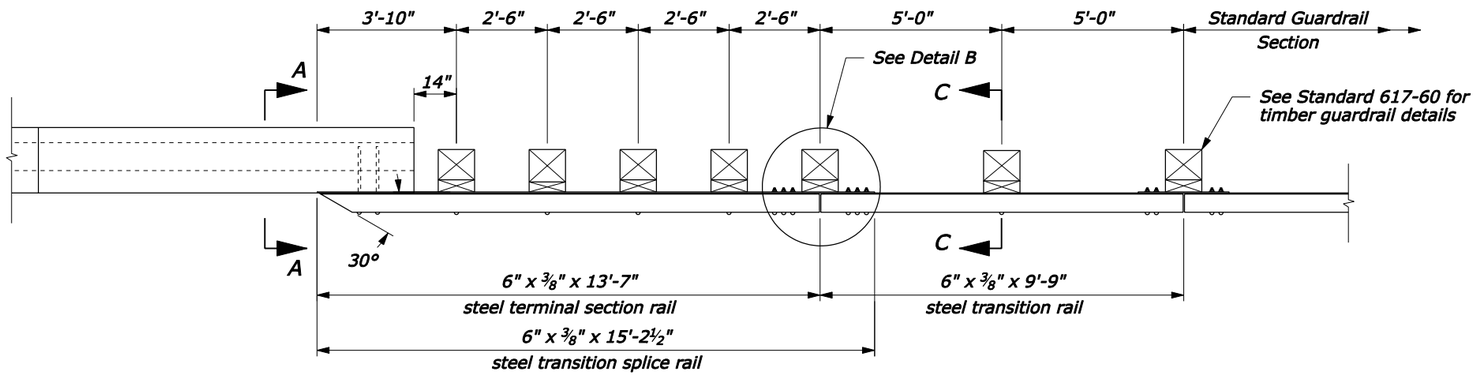

PLAN

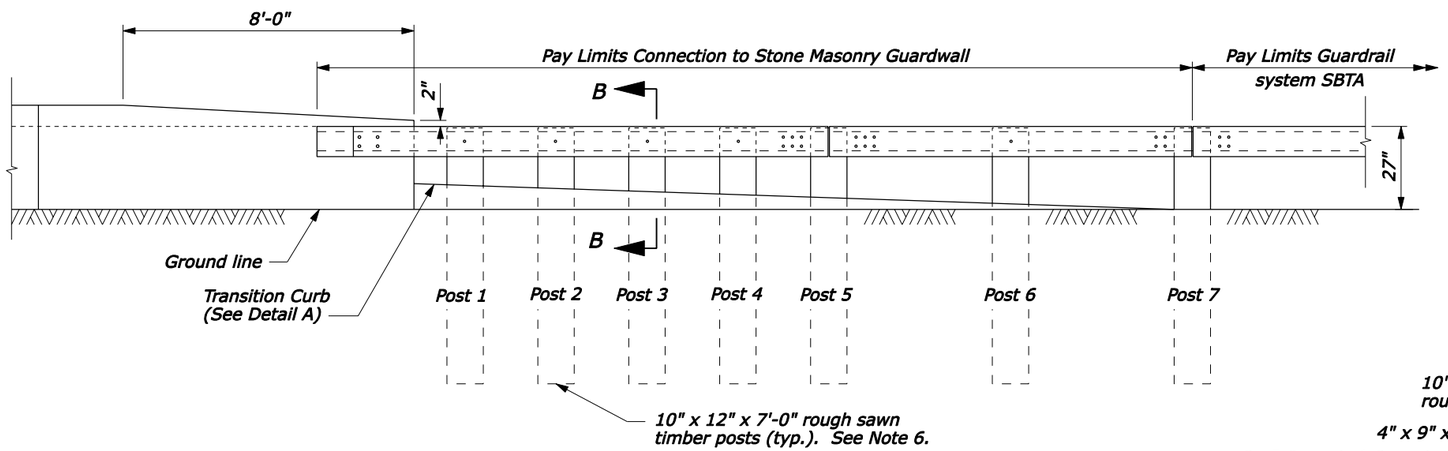

ELEVATION

NOTE:

1. See Sheet 2 of 2 for Sections A-A through C-C, steel rail layouts, and other details.
2. Use weathering steel for all structural steel and fastener hardware.
3. Transition curbing (including dowel) will be paid for at the contract unit price for transition curbing.
4. Install transition curbing of material type specified in plans.
5. Curb may be continuous or slabs at least 4'-11" in length. Install faces of slabs evenly and with maximum ⅛" separation.
6. If contract requires steel post, substitute wood post with 6" x 9" x 6'-6" long steel post.

FOR COMMENT

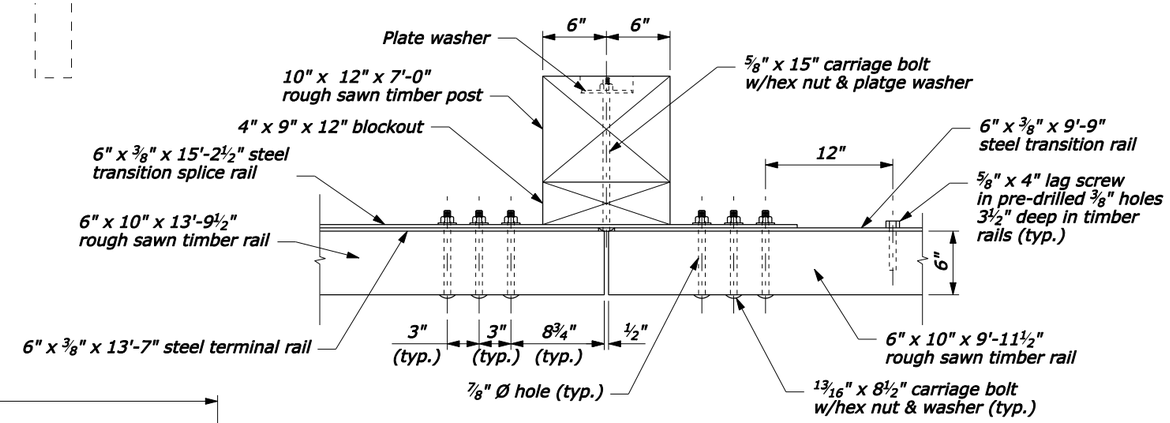

DETAIL B

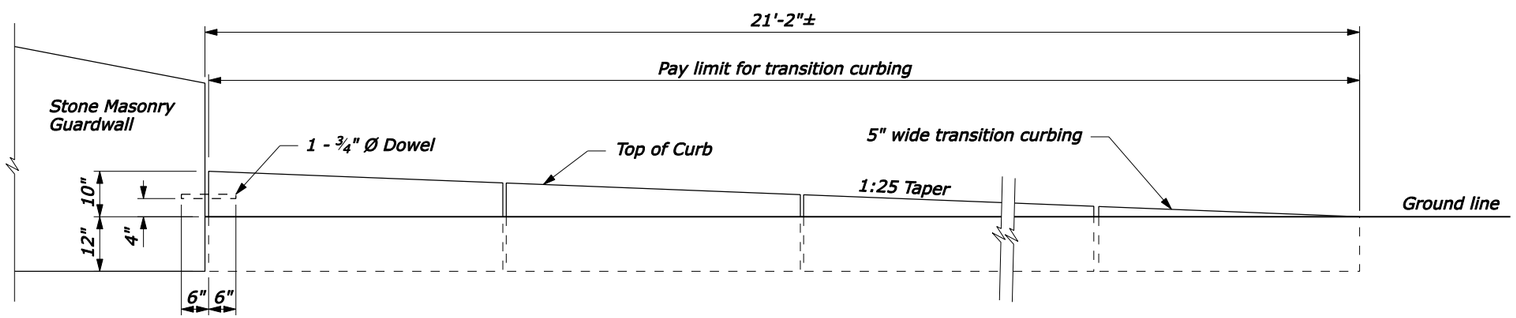

DETAIL A

NO SCALE

U.S. DEPARTMENT OF TRANSPORTATION
FEDERAL HIGHWAY ADMINISTRATION
FEDERAL LANDS HIGHWAY

U.S. CUSTOMARY STANDARD

STEEL-BACKED TIMBER GUARDRAIL TL-3 CONNECTION TO STONE MASONRY GUARDRAIL

Sheet 1 of 2

STANDARD APPROVED FOR USE --/----

REVISED:
DRAFT: 1/2005

STANDARD 617-65

F:\StanDraw\Draft\V8\st61765.dgn [US Customary] 19-Jan-2005 10:27 AM

STATE	PROJECT	SHEET NUMBER

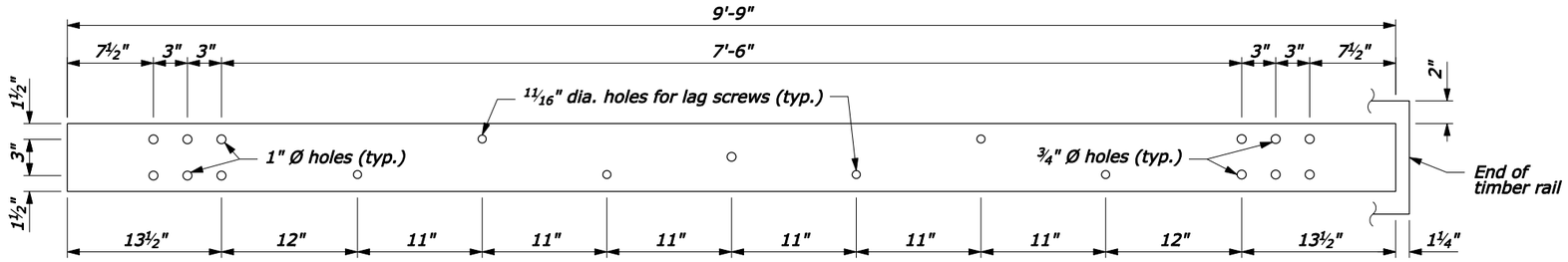

TRANSITION RAIL
6" x ⅜" x 9'-9"

NOTE:

1. Pre-drill 11/16" holes in blocks outs and posts.

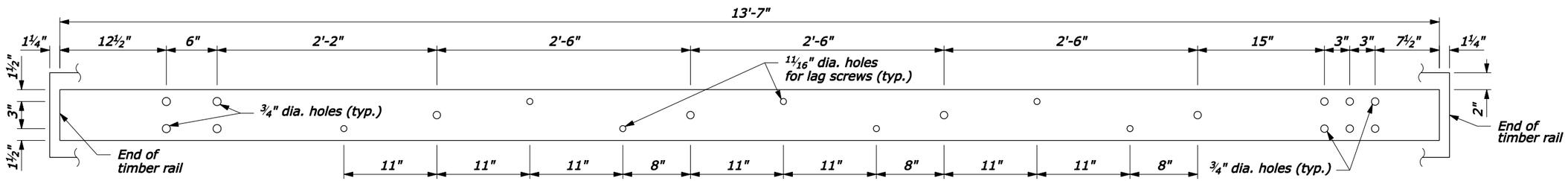

TERMINAL SECTION RAIL
6" x ⅜" x 13'-7"

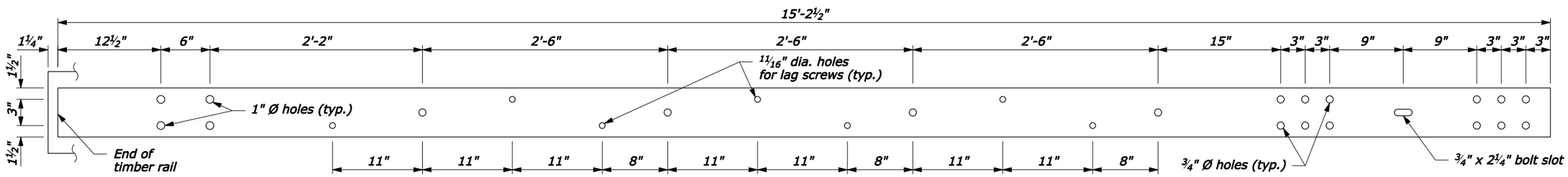

TRANSITION SPLICE RAIL
6" x ⅜" x 15'-2½"

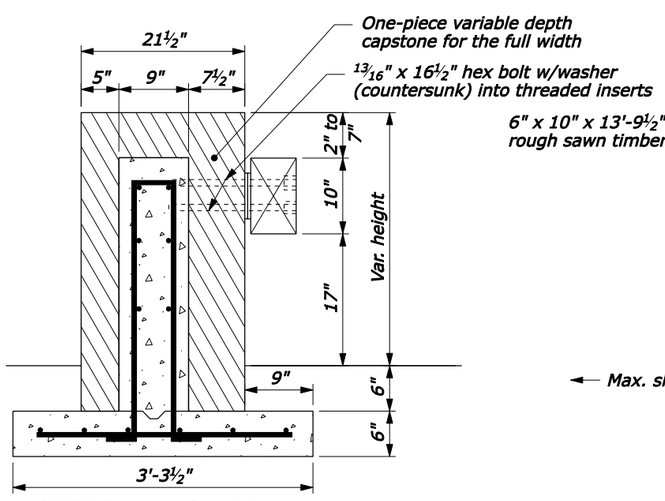

SECTION A-A GUARDWALL

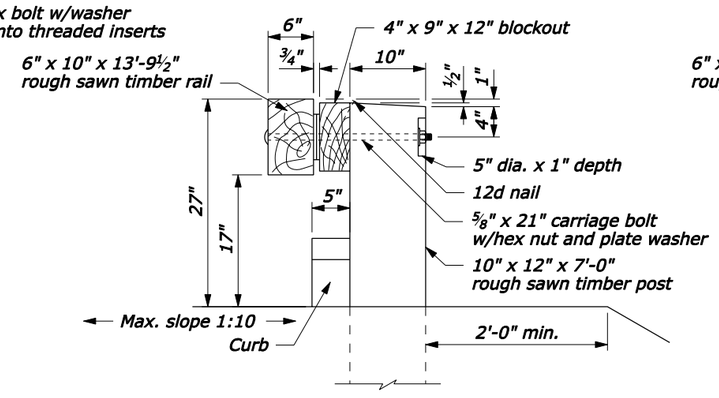

SECTION B-B

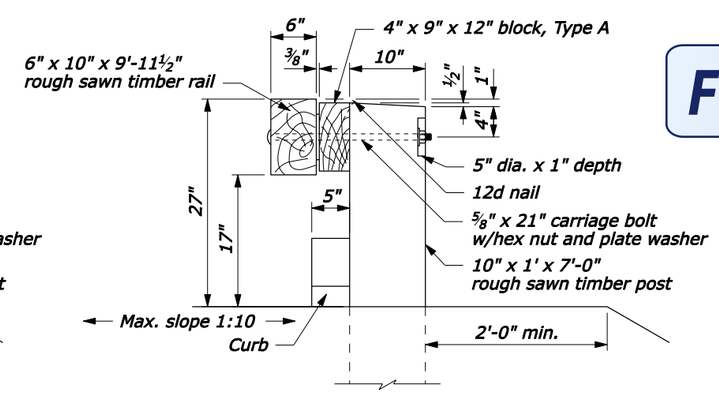

SECTION C-C

FOR COMMENT

NO SCALE

U.S. DEPARTMENT OF TRANSPORTATION
FEDERAL HIGHWAY ADMINISTRATION
FEDERAL LANDS HIGHWAY

U.S. CUSTOMARY STANDARD

STEEL-BACKED TIMBER GUARDRAIL TL-3 CONNECTION TO STONE MASONRY GUARDRAIL

Sheet 2 of 2

STANDARD APPROVED FOR USE --/----

REVISED:
DRAFT: 1/2005

STANDARD 617-65

F:\StanDraw\Draft\V8\st61765.dgn [US Customary] 19-Jan-2005 10:28 AM

STATE	PROJECT	SHEET NUMBER

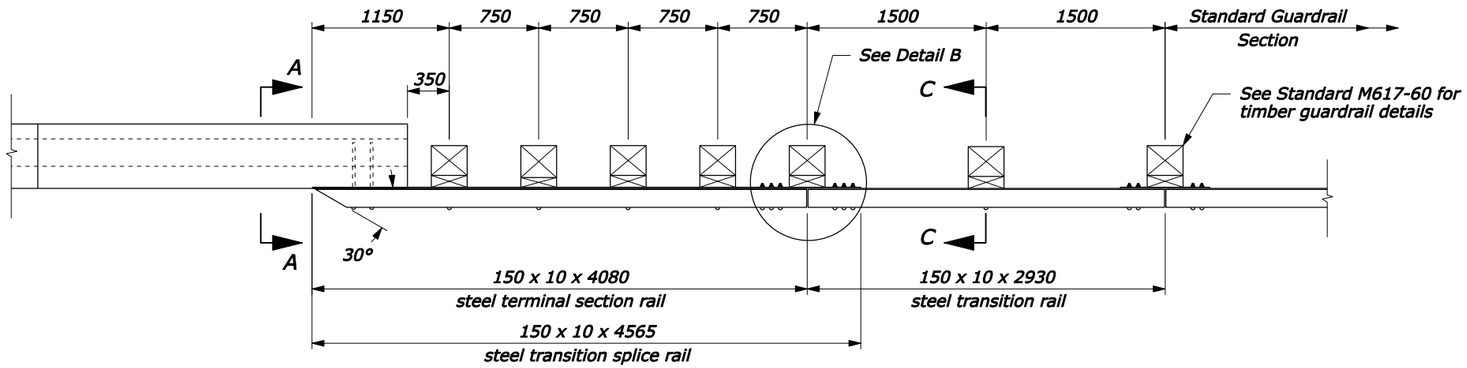

PLAN

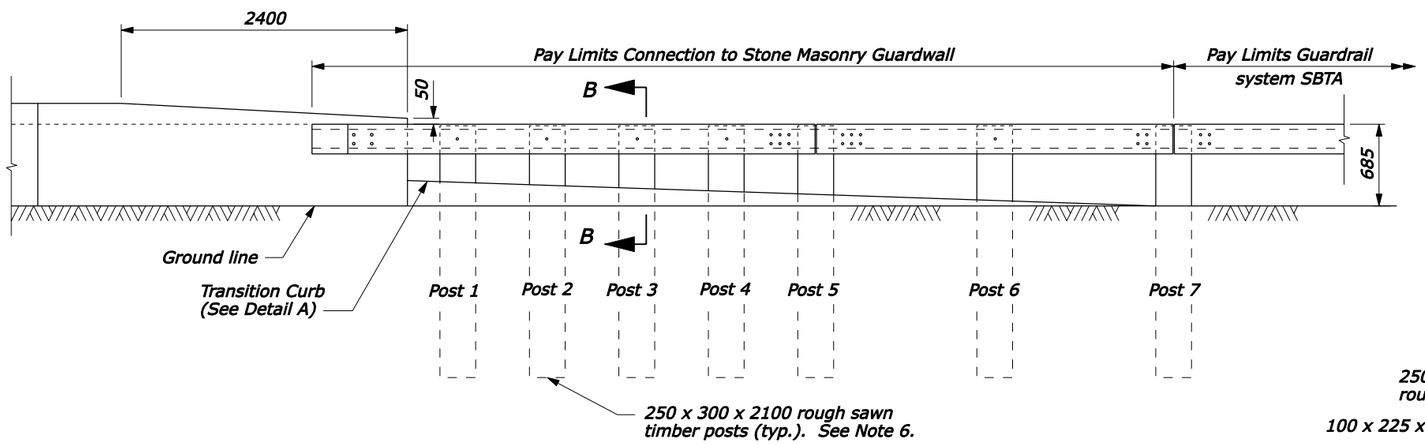

ELEVATION

NOTE:

1. See Sheet 2 of 2 for Sections A-A through C-C, steel rail layouts, and other details.
2. Use weathering steel for all structural steel and fastener hardware.
3. Transition curbing (including dowel) will be paid for at the contract unit price for transition curbing.
4. Install transition curbing of material type specified in plans.
5. Curb may be continuous or slabs at least 1.5 m in length. Install faces of slabs evenly and with maximum 2.5 mm separation.
6. If contract requires steel post, substitute wood post with W150 x 225 x 2.0 m long.
7. Furnish hardware in the metric sizes shown. Equivalent US Customary sizes may be used when metric sizes are not available.
8. Dimensions without units are millimeters.

FOR COMMENT

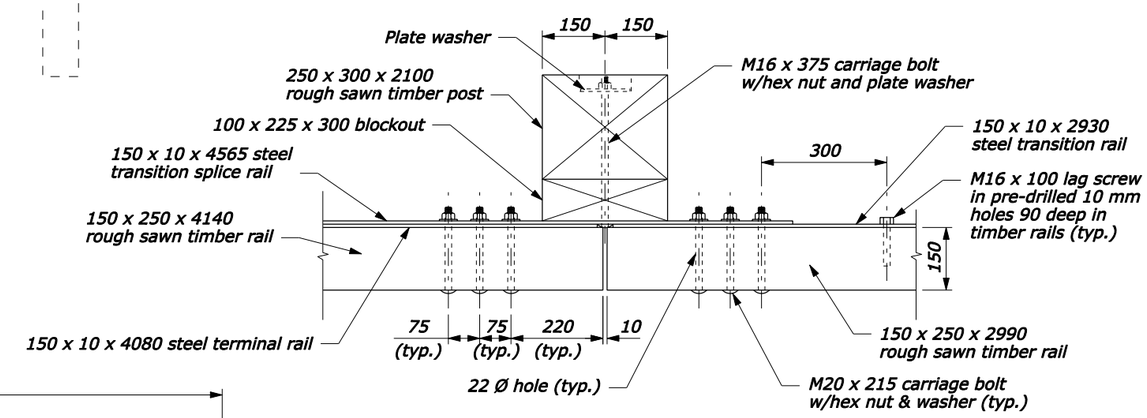

DETAIL B

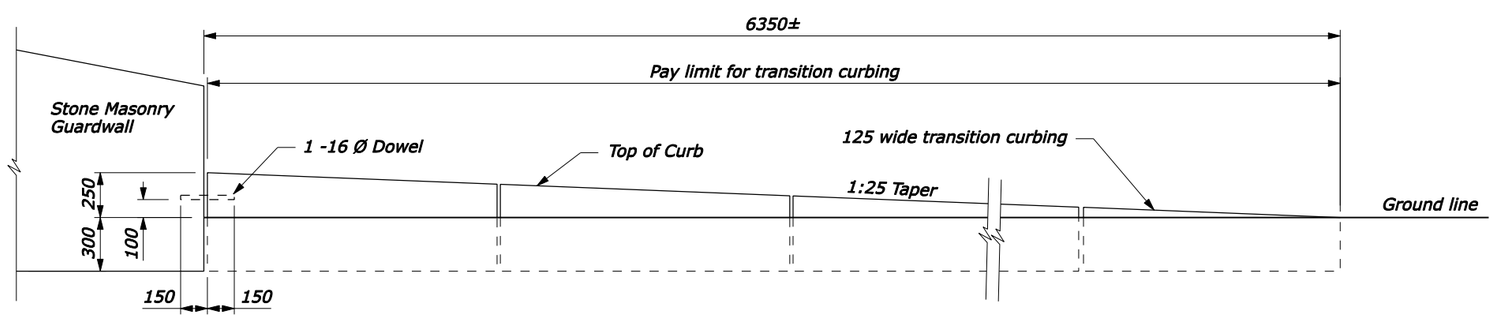

DETAIL A

NO SCALE

U.S. DEPARTMENT OF TRANSPORTATION
FEDERAL HIGHWAY ADMINISTRATION
FEDERAL LANDS HIGHWAY

METRIC STANDARD

STEEL-BACKED TIMBER GUARDRAIL TL-3 CONNECTION TO STONE MASONARY GUARDRAIL

Sheet 1 of 2

STANDARD APPROVED FOR USE --/----

REVISED:
DRAFT: 1/2005

STANDARD
M617-65

F:\StanDraw\Draft\V8\st61765.dgn [Metric] 19-Jan-2005 10:25 AM

STATE	PROJECT	SHEET NUMBER

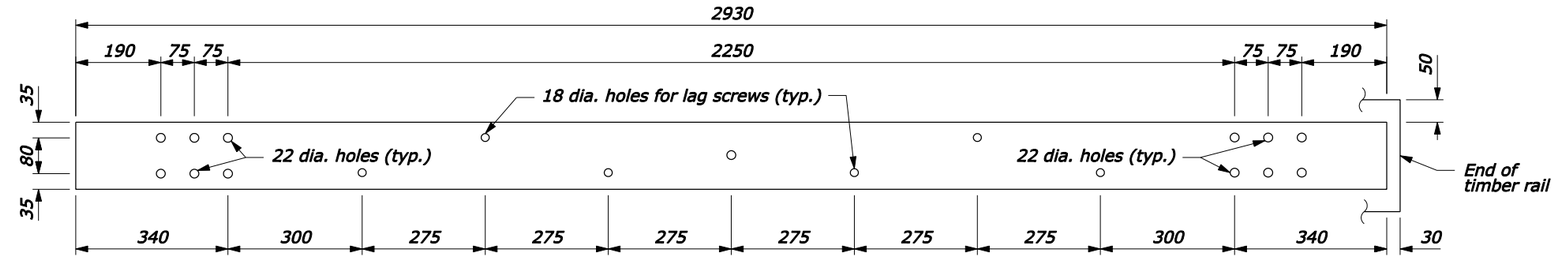

TRANSITION RAIL
150 x 10 x 2930

NOTE:

1. Pre-drill 18 mm holes in blocks outs and posts.
2. Furnish hardware in the metric sizes shown. Equivalent US Customary sizes may be used when metric sizes are not available.
3. Dimensions without units are millimeters.

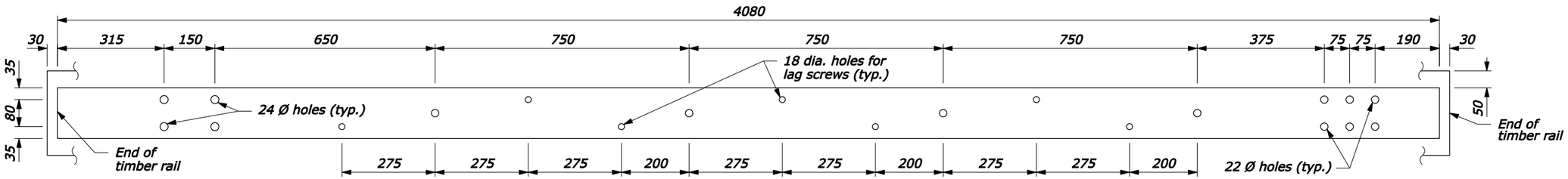

TERMINAL SECTION RAIL
150 x 10 x 4080

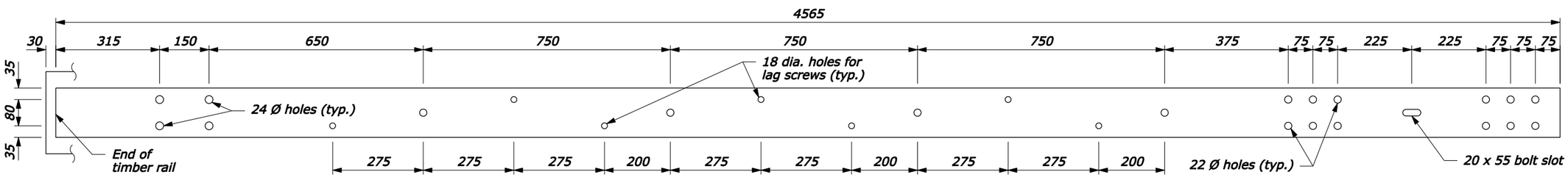

TRANSITION SPLICE RAIL
150 x 10 x 4565

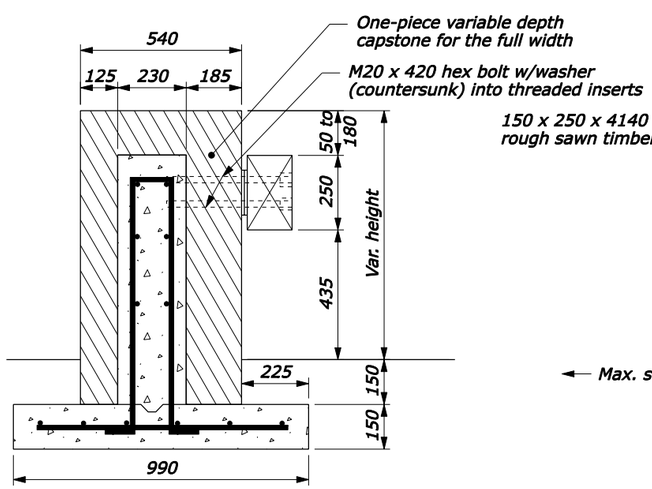

SECTION A-A GUARDWALL

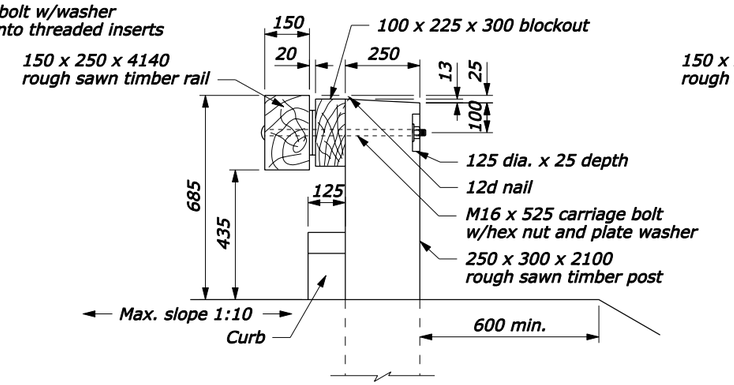

SECTION B-B

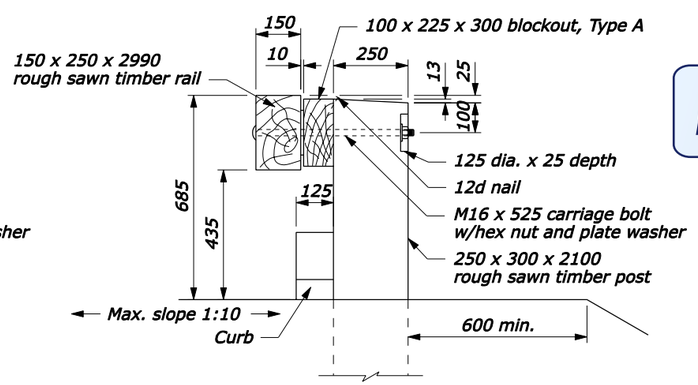

SECTION C-C

FOR COMMENT

NO SCALE

U.S. DEPARTMENT OF TRANSPORTATION
FEDERAL HIGHWAY ADMINISTRATION
FEDERAL LANDS HIGHWAY

METRIC STANDARD

STEEL-BACKED TIMBER GUARDRAIL TL-3 CONNECTION TO STONE MASONARY GUARDRAIL

Sheet 2 of 2

STANDARD APPROVED FOR USE --/----

REVISED:
DRAFT: 1/2005

STANDARD
M617-65

19-Jan-2005 10:26 AM

F:\StanDraw\Draft\V8\st61765.dgn [Metric]

STATE	PROJECT	SHEET NUMBER

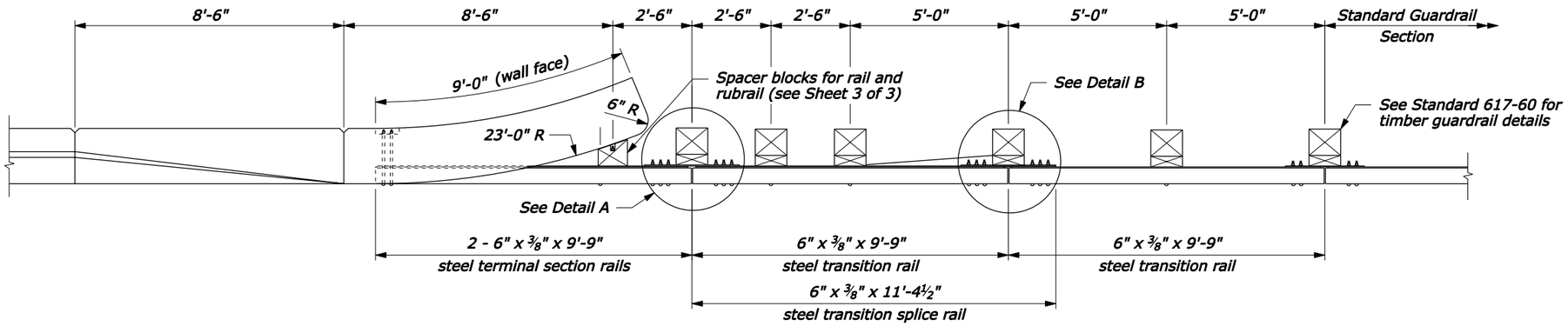

PLAN

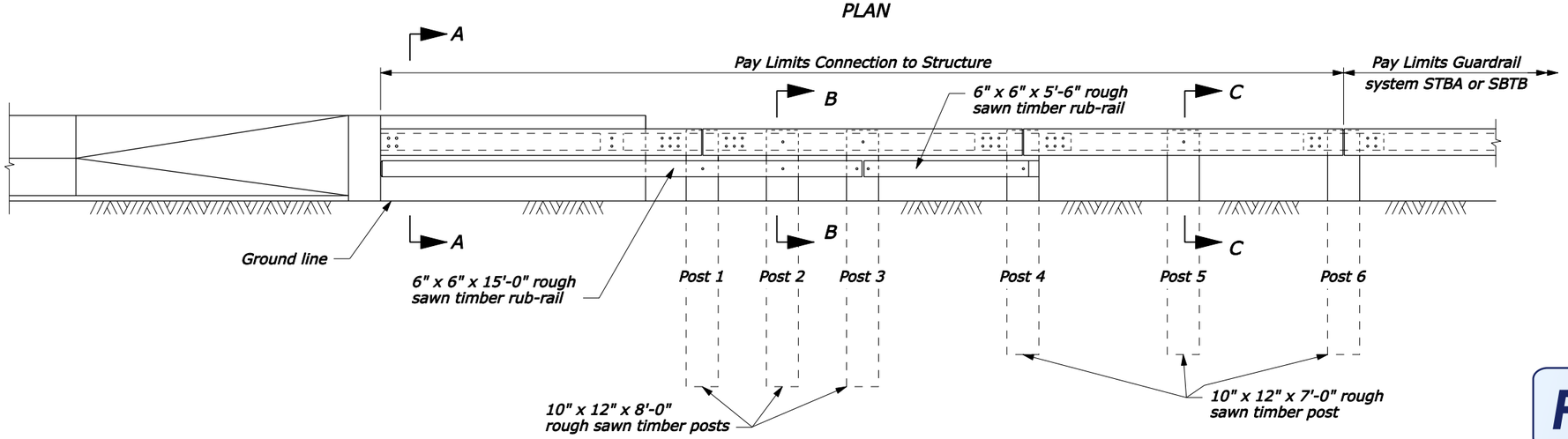

ELEVATION

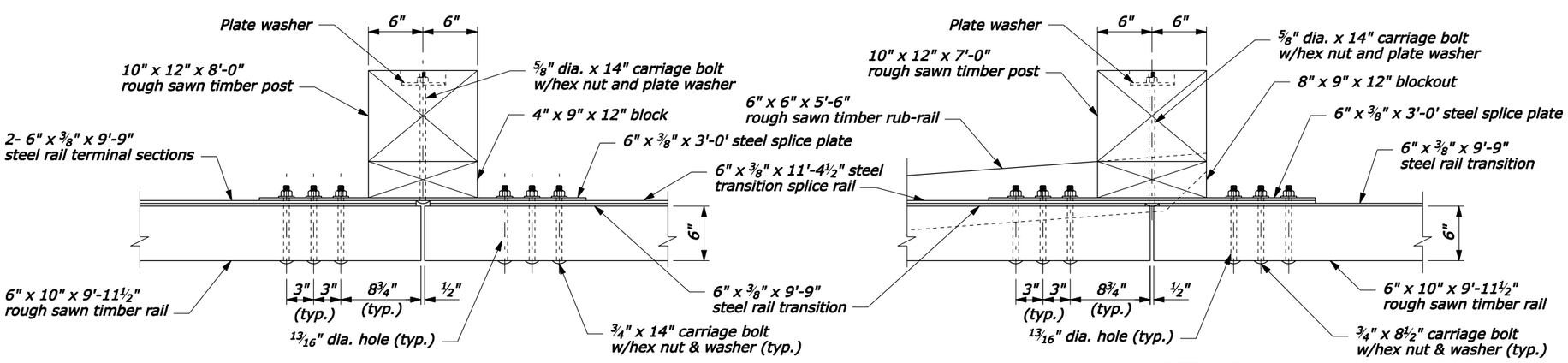

DETAIL A

DETAIL B

POST CONNECTION

NO SCALE

NOTE:

1. See the following sheets for Sections A-A through C-C, steel rail layouts, and other details.
2. Use weathering steel for all structural steel and fastener hardware.

FOR COMMENT

U.S. DEPARTMENT OF TRANSPORTATION
FEDERAL HIGHWAY ADMINISTRATION
FEDERAL LANDS HIGHWAY

U.S. CUSTOMARY STANDARD

STEEL-BACKED TIMBER GUARDRAIL CONNECTION TO CURVED BACK STRUCTURE

Sheet 1 of 3

STANDARD APPROVED FOR USE 1/1994

REVISED: 4/1994
DRAFT: 4/2005

STANDARD 617-66

F:\StanDraw\Draft\V8\st61766.dgn [US Customary] 14-Apr-2005 02:18 PM

STATE	PROJECT	SHEET NUMBER

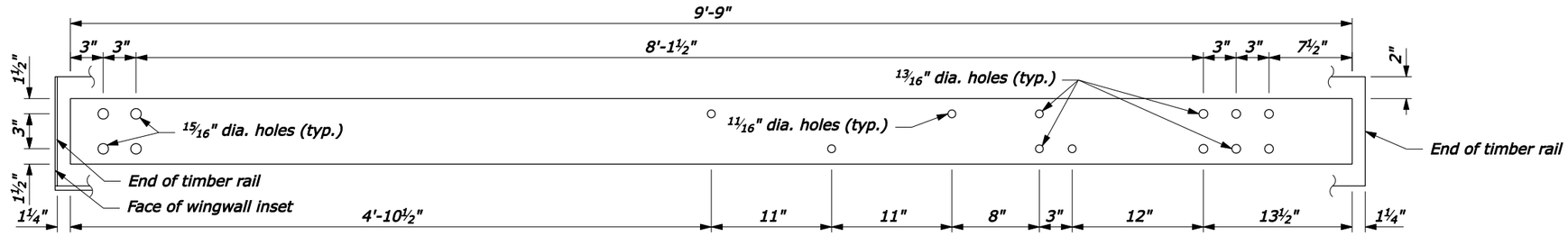

TERMINAL SECTION RAIL
6" x ⅜" x 9'-9"

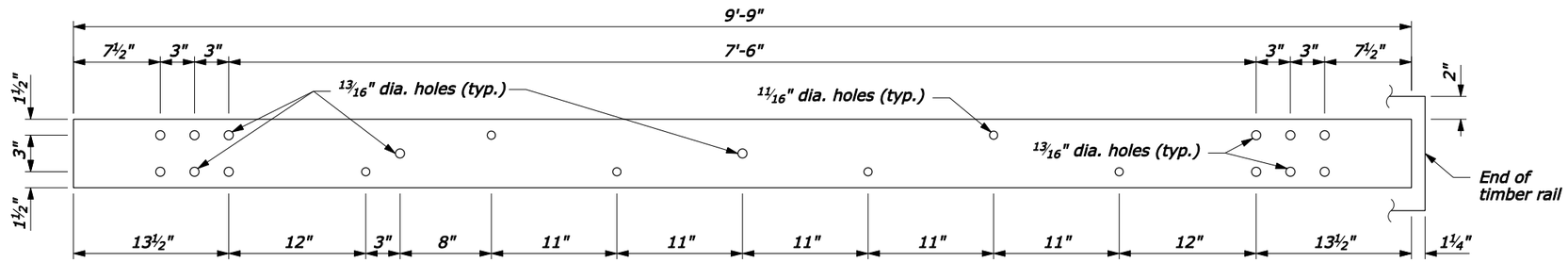

TRANSITION RAIL
6" x ⅜" x 9'-9"

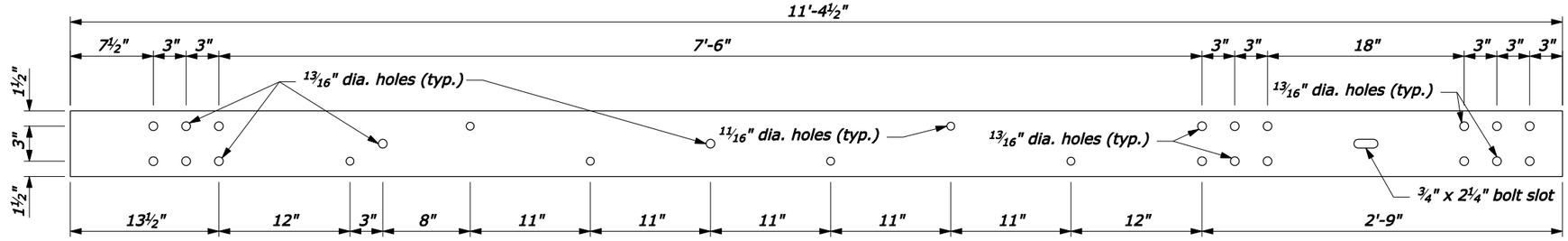

TRANSITION SPLICE RAIL
6" x ⅜" x 11'-4½"

FOR COMMENT

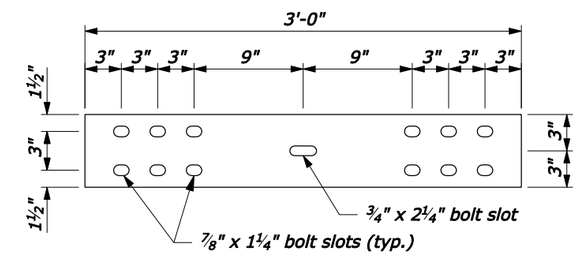

SPLICE PLATE
6" x ⅜" x 3'-0"

NOTE:

1. Pre-drill ⅝-inch holes in timber rail and ⅜-inch holes in the wood spacer block for the ⅝-inch lag screws.

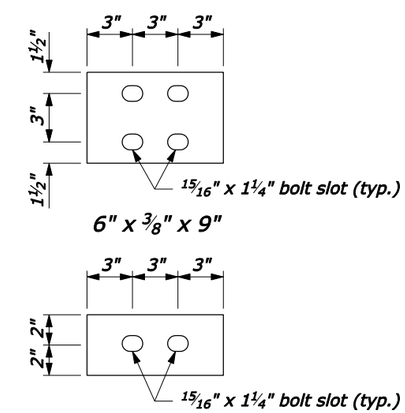

BEARING PLATE DETAILS

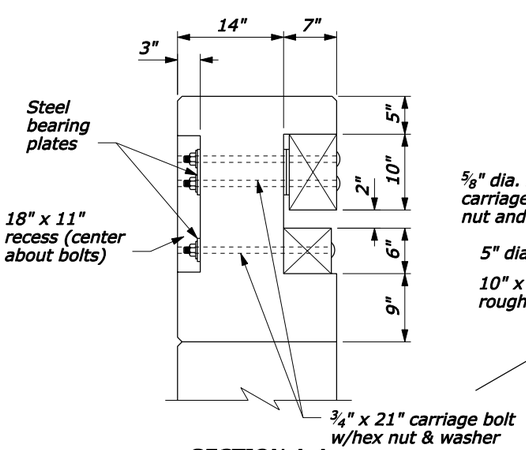

SECTION A-A

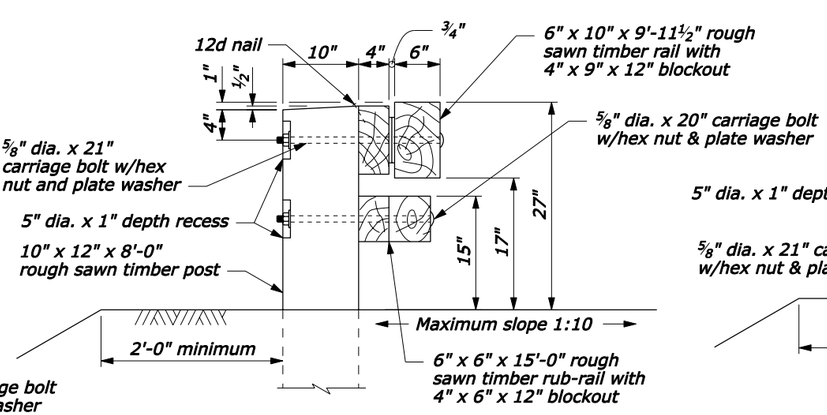

SECTION B-B

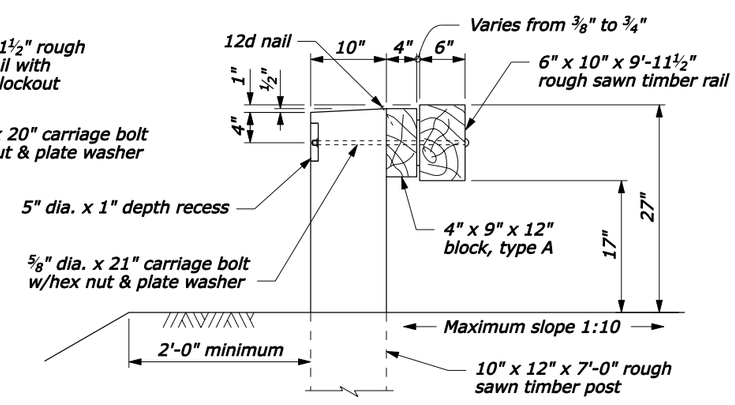

SECTION C-C

NO SCALE

U.S. DEPARTMENT OF TRANSPORTATION
FEDERAL HIGHWAY ADMINISTRATION
FEDERAL LANDS HIGHWAY

U.S. CUSTOMARY STANDARD

STEEL-BACKED TIMBER GUARDRAIL CONNECTION TO CURVED BACK STRUCTURE

Sheet 2 of 3

STANDARD APPROVED FOR USE 1/1994

REVISED: 4/1994
DRAFT: 4/2005

STANDARD 617-66

F:\StanDraw\Draft\V8\st61766.dgn [US Customary] 14-Apr-2005 02:18 PM

STATE	PROJECT	SHEET NUMBER

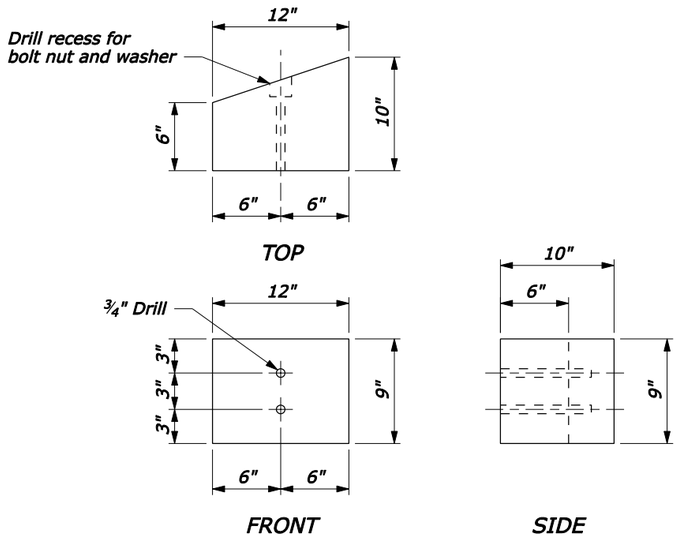

SPACER BLOCK FOR RAIL

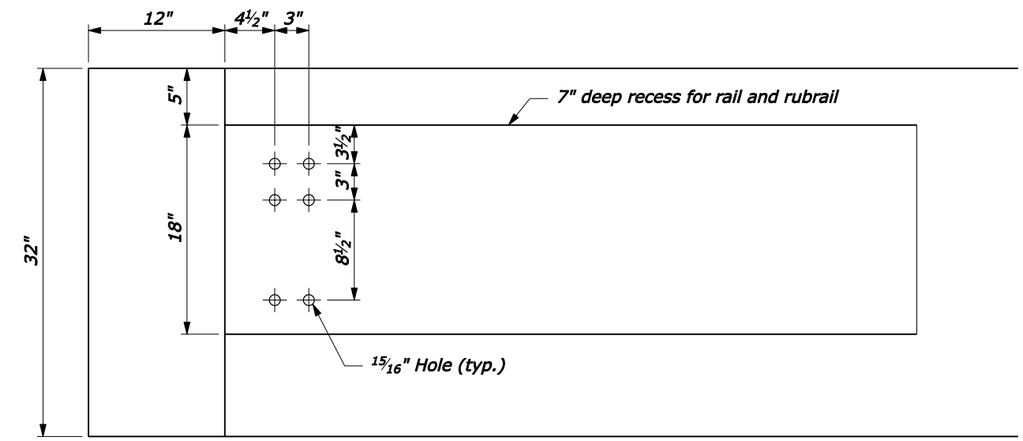

PARAPET ATTACHMENT DETAIL

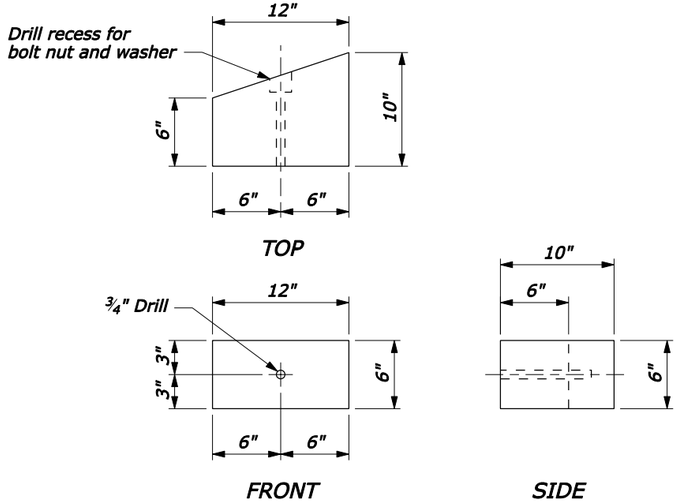

SPACER BLOCK FOR RUB-RAIL

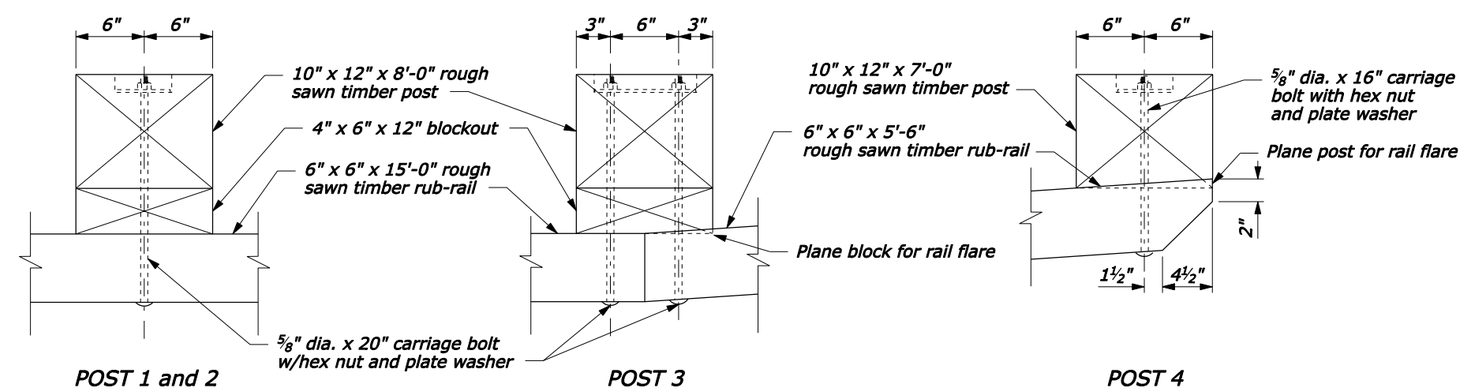

RUB-RAIL CONNECTIONS

FOR COMMENT

NO SCALE

U.S. DEPARTMENT OF TRANSPORTATION
FEDERAL HIGHWAY ADMINISTRATION
FEDERAL LANDS HIGHWAY

U.S. CUSTOMARY STANDARD

STEEL-BACKED TIMBER GUARDRAIL CONNECTION TO CURVED BACK STRUCTURE

Sheet 3 of 3

STANDARD APPROVED FOR USE 1/1994

REVISED: 4/1994
DRAFT: 4/2005

STANDARD
617-66

F:\StanDraw\Draft\V8\st61766.dgn [US Customary] 14-Apr-2005 02:18 PM

STATE	PROJECT	SHEET NUMBER

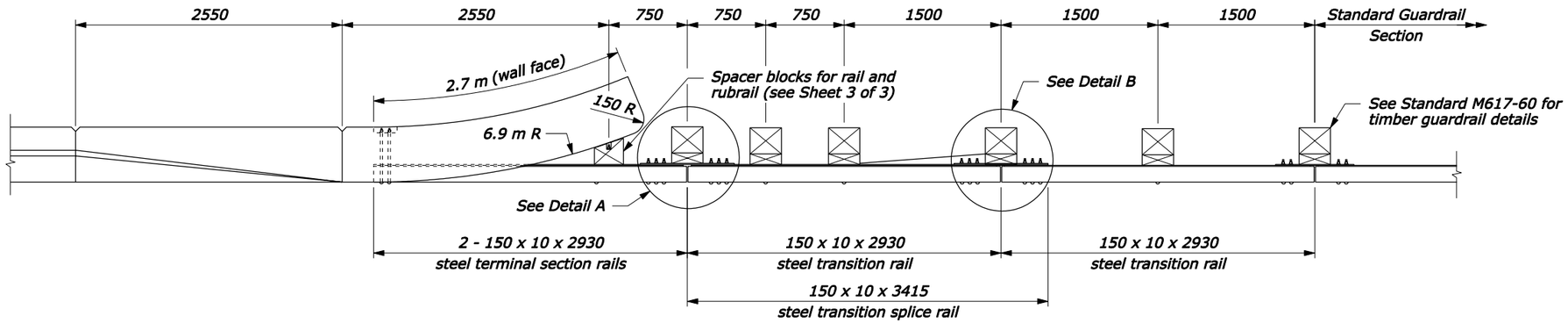

PLAN

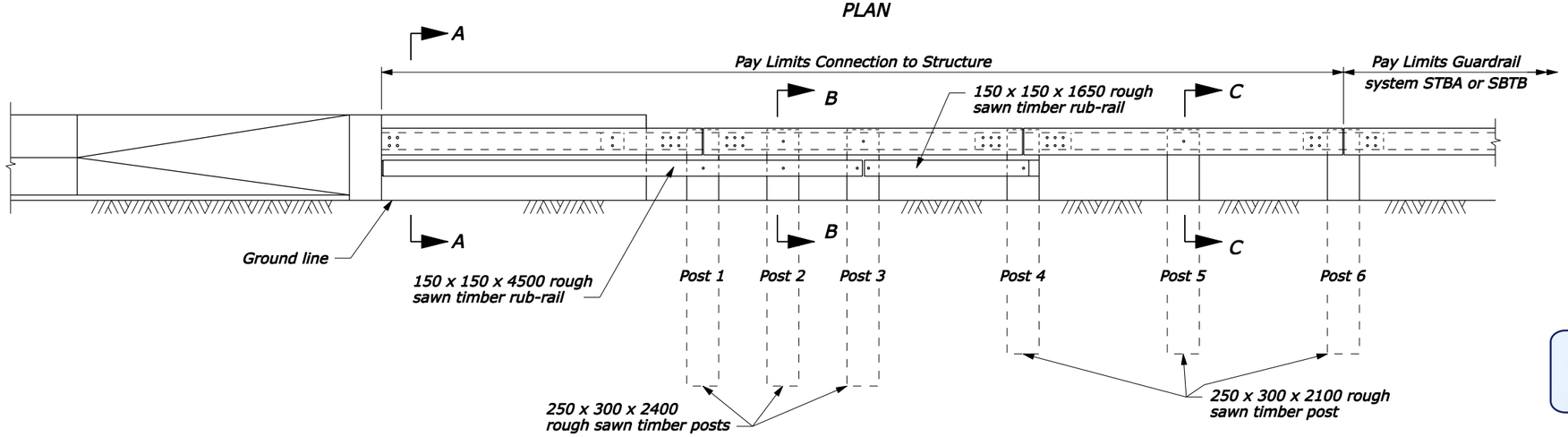

ELEVATION

NOTE:

1. See the following sheets for Sections A-A through C-C, steel rail layouts, and other details.
2. Use weathering steel for all structural steel and fastener hardware.
3. Furnish hardware in the metric sizes shown. Equivalent US Customary sizes may be used when metric sizes are not available.
4. Dimensions without units are millimeters.

FOR COMMENT

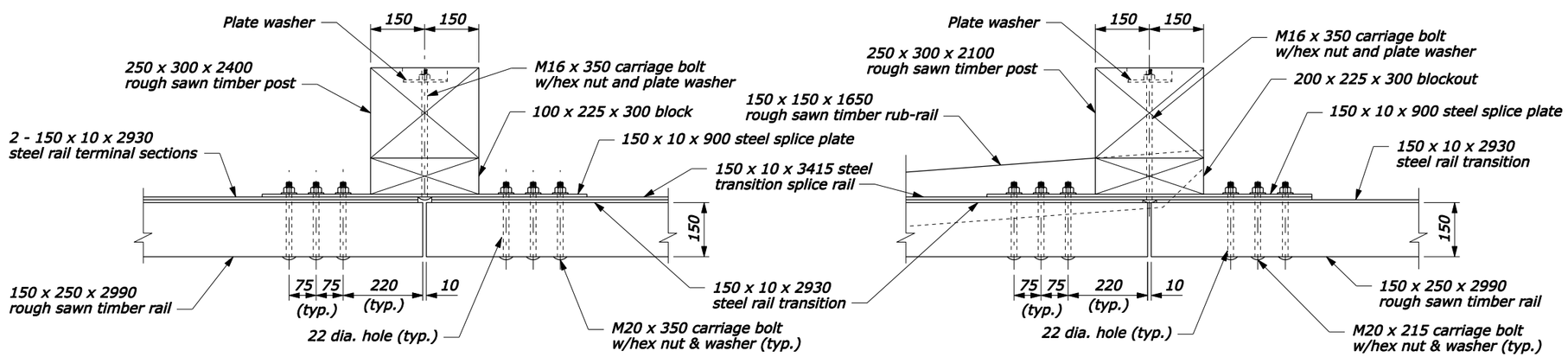

DETAIL A

DETAIL B

POST CONNECTION

NO SCALE

U.S. DEPARTMENT OF TRANSPORTATION
FEDERAL HIGHWAY ADMINISTRATION
FEDERAL LANDS HIGHWAY

METRIC STANDARD

STEEL-BACKED TIMBER GUARDRAIL CONNECTION TO CURVED BACK STRUCTURE

Sheet 1 of 3

STANDARD APPROVED FOR USE 3/1996

REVISED:
DRAFT: 4/2005

STANDARD
M617-66

F:\StanDraw\Draft\V8\st61766.dgn [Metric] 14-Apr-2005 02:09 PM

STATE	PROJECT	SHEET NUMBER

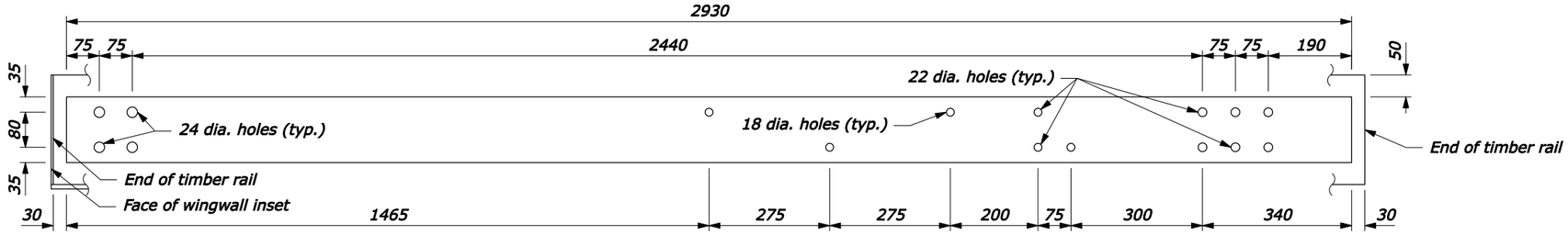

TERMINAL SECTION RAIL
150 x 10 x 2930

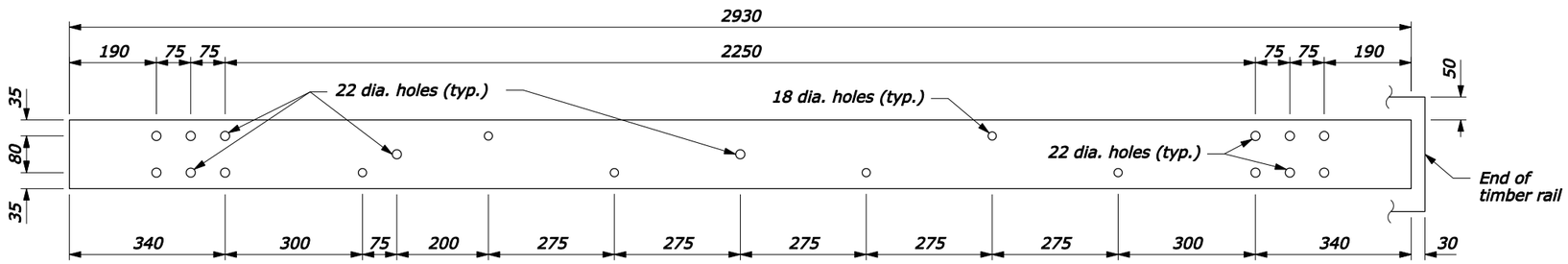

TRANSITION RAIL
150 x 10 x 2930

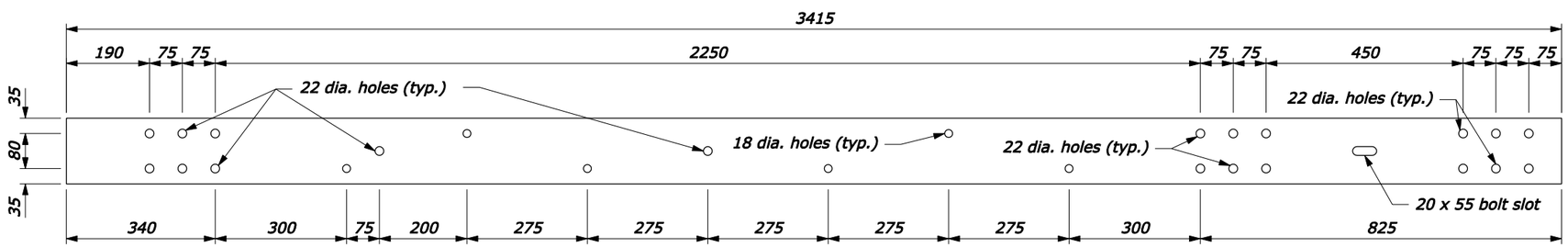

TRANSITION SPLICE RAIL
150 x 10 x 3415

NOTE:

1. Pre-drill 16 mm holes in timber rail and 10 mm holes in the wood spacer block for the 16 mm lag screws.
2. Furnish hardware in the metric sizes shown. Equivalent US Customary sizes may be used when metric sizes are not available.
3. Dimensions without units are millimeters.

FOR COMMENT

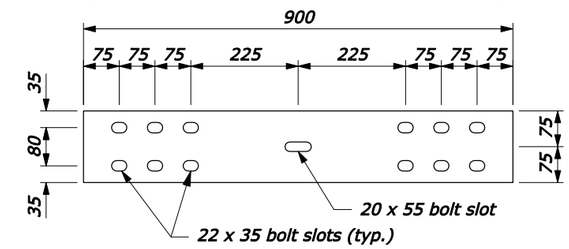

SPLICE PLATE
150 x 10 x 900

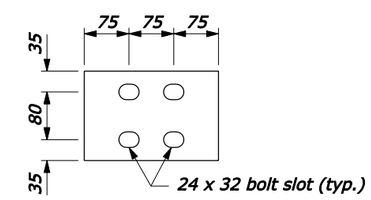

150 x 10 x 225

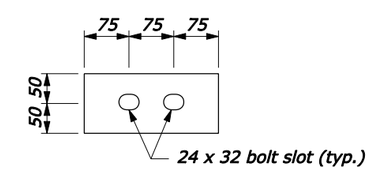

100 x 10 x 225

BEARING PLATE DETAILS

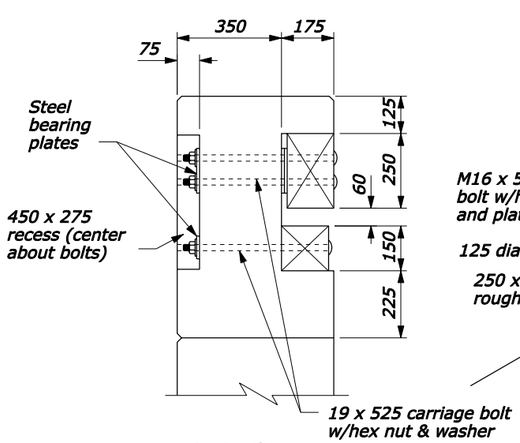

SECTION A-A

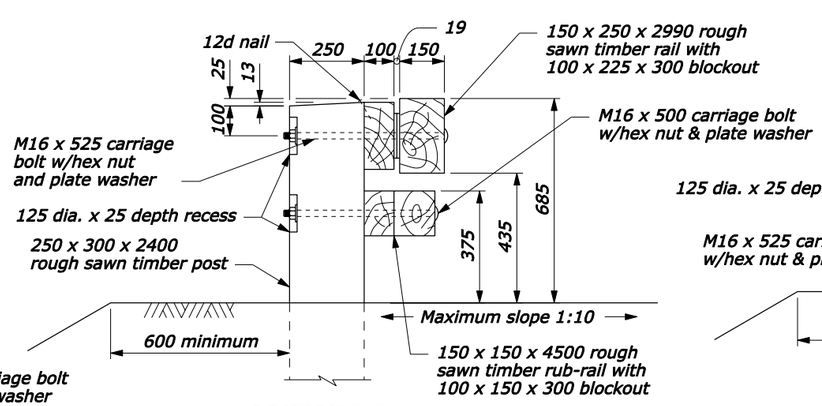

SECTION B-B

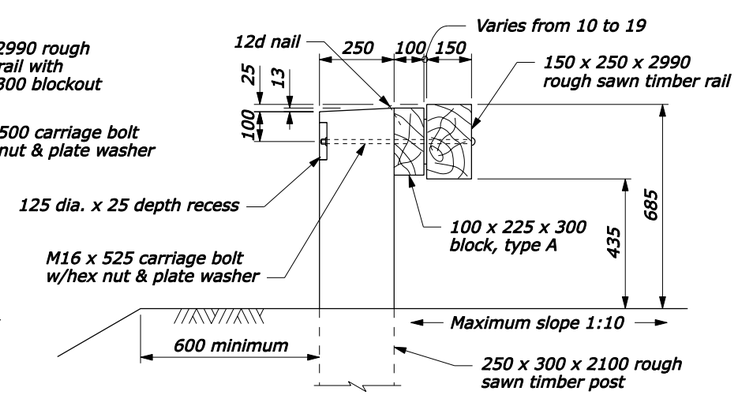

SECTION C-C

NO SCALE

U.S. DEPARTMENT OF TRANSPORTATION
FEDERAL HIGHWAY ADMINISTRATION
FEDERAL LANDS HIGHWAY

METRIC STANDARD

STEEL-BACKED TIMBER GUARDRAIL CONNECTION TO CURVED BACK STRUCTURE

Sheet 2 of 3

STANDARD APPROVED FOR USE 3/1996

REVISED:
DRAFT: 4/2005

STANDARD
M617-66

14-Apr-2005 01:44 PM

F:\StanDraw\Draft\V8\st61766.dgn [Metric]

STATE	PROJECT	SHEET NUMBER

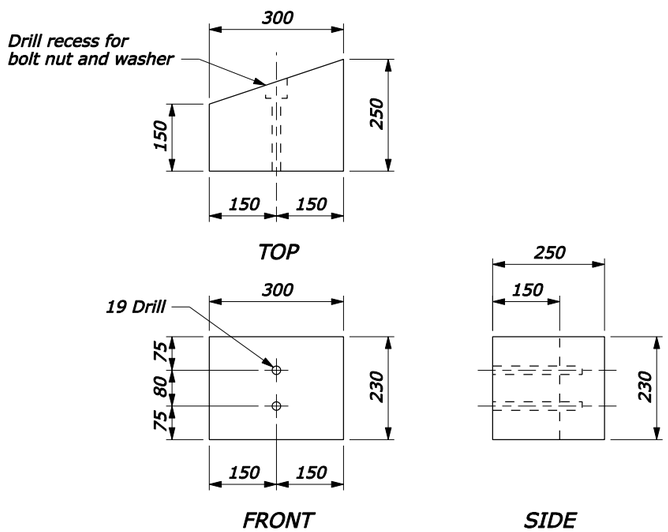

SPACER BLOCK FOR RAIL

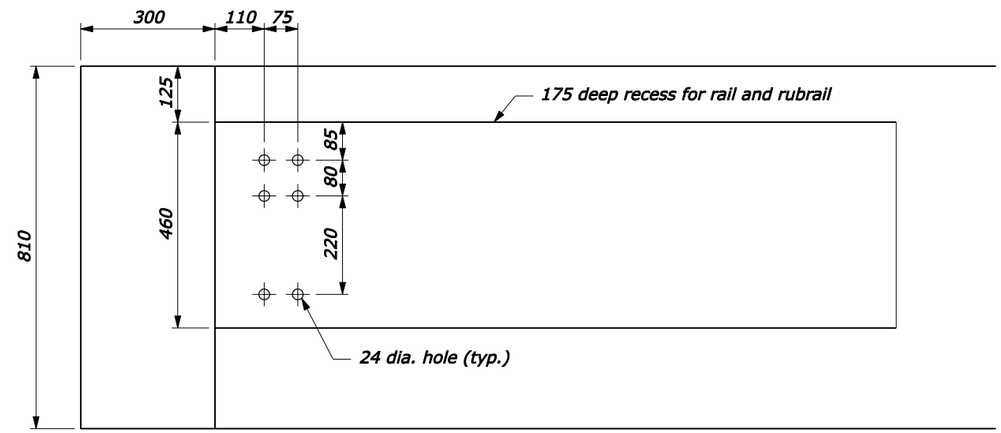

PARAPET ATTACHMENT DETAIL

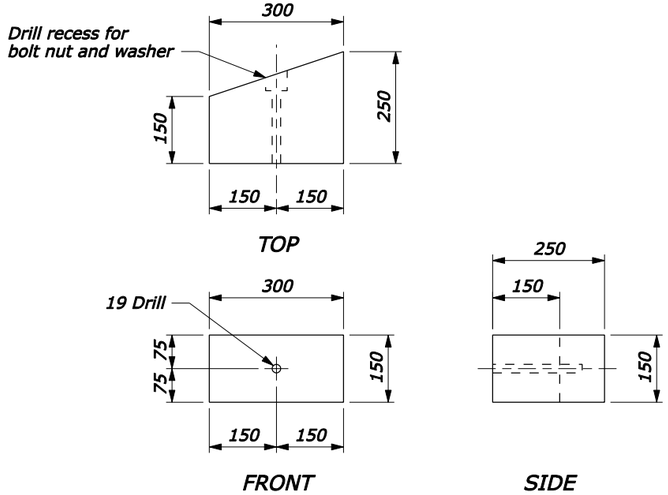

SPACER BLOCK FOR RUB-RAIL

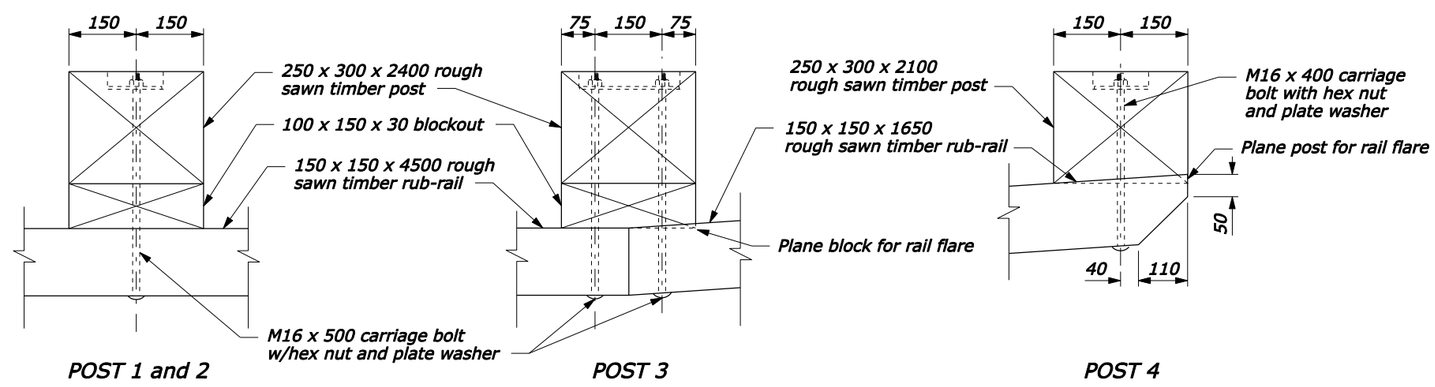

RUB-RAIL CONNECTIONS

FOR COMMENT

NO SCALE

U.S. DEPARTMENT OF TRANSPORTATION
FEDERAL HIGHWAY ADMINISTRATION
FEDERAL LANDS HIGHWAY

METRIC STANDARD

STEEL-BACKED TIMBER GUARDRAIL CONNECTION TO CURVED BACK STRUCTURE

Sheet 3 of 3

STANDARD APPROVED FOR USE 3/1996

REVISED:
DRAFT: 4/2005

STANDARD
M617-66

14-Apr-2005 02:09 PM
F:\StanDraw\Draft\V8\st61766.dgn [Metric]

STATE	PROJECT	SHEET NUMBER

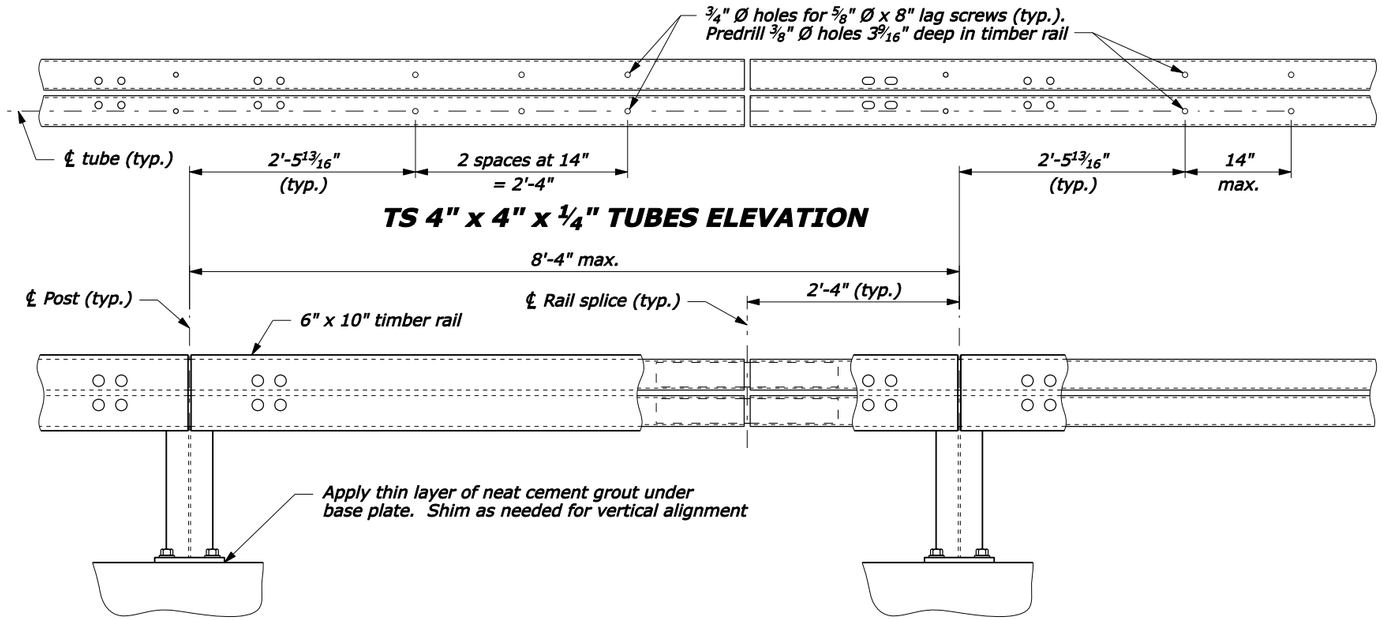

BRIDGE RAIL ELEVATION

NOTE:

1. Steel for rail posts, base plates, shims, splice sleeves, and anchor assembly plates conforms to ASTM A36. Structural tubing for rails conforms to ASTM A500, Grade B. Paint all metal components of the bridge rail except post base shims, anchor assemblies, and rail splice sleeves. Galvanize post base shims, anchor assemblies, and rail splice sleeves. Hex bolts conform to AASHTO M164 (ASTM A325). Hex coupling nuts conform to ASTM A563, Grade C, D, or DH and shall have a center stop. All other fasteners conform to ASTM A307. See Special Contract Requirements for painting.
2. Shop fabricate structural steel. Submit shop drawings to the CO for approval before fabrication. Provide drawings showing rail section lengths, splice locations, rail post spacing, and fastener lengths. Welding conforms to ANSI/AASHTO/AWS D1.5. Use a certified welder. Fabricate all steel before galvanizing or painting.
3. Section lengths of TS 4" x 4" rails shall be continuous over a minimum of three posts.
4. Provide neat cement grout consisting of a mixture of cement and water mixed to a smooth viscous paste.
5. Erect the rail parallel to grade.
6. Timber conforms to Subsection 710.08.

FOR COMMENT

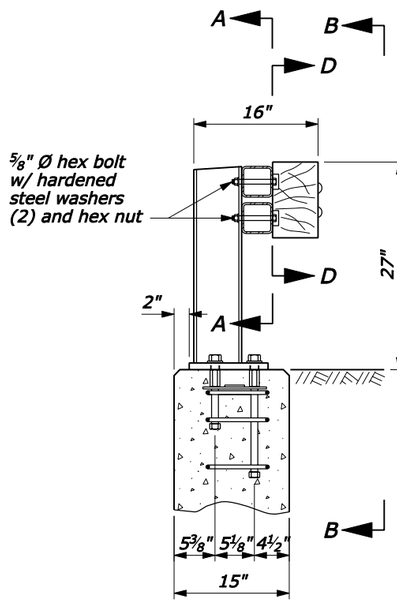

TYPICAL SECTION @ POST

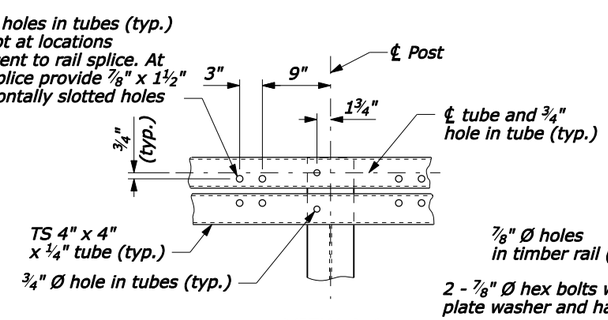

VIEW A-A

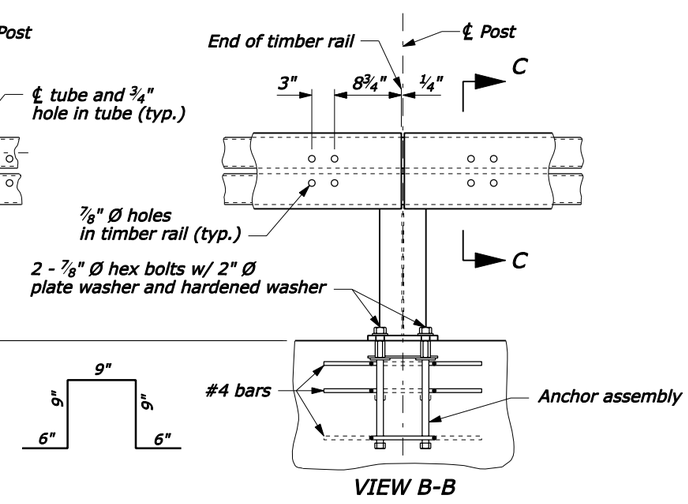

VIEW B-B

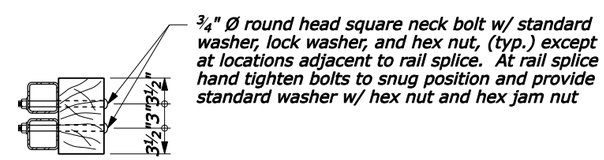

SECTION C-C

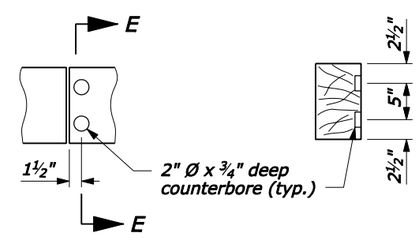

VIEW D-D SECTION E-E

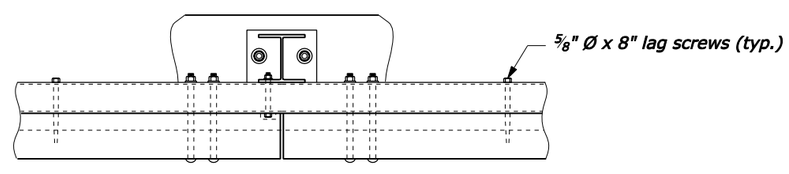

PLAN VIEW @ POST

NO SCALE

U.S. DEPARTMENT OF TRANSPORTATION
FEDERAL HIGHWAY ADMINISTRATION
FEDERAL LANDS HIGHWAY

U.S. CUSTOMARY STANDARD

STEEL TUBE-BACKED TIMBER BRIDGE RAIL

Sheet 1 of 3

STANDARD APPROVED FOR USE --/----

REVISED:
DRAFT: 6/2005

STANDARD 617-75

F:\StanDraw\Draft\V8\st61775.dgn [US Customary] 09-Jun-2005 04:07 PM

STATE	PROJECT	SHEET NUMBER

FOR COMMENT

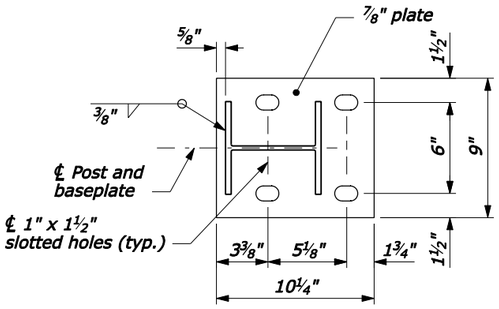

BASEPLATE DETAIL

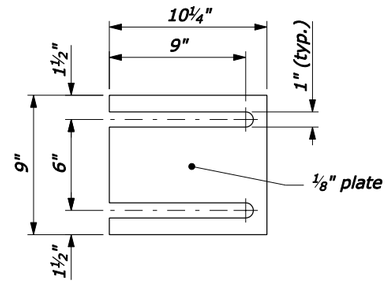

RAIL POST BASE SHIM

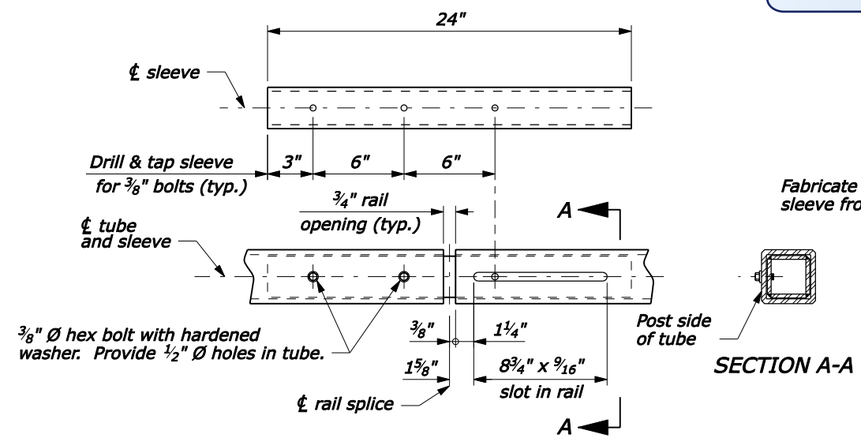

RAIL SPLICE DETAIL

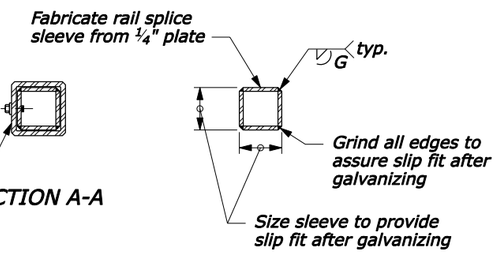

SLEEVE

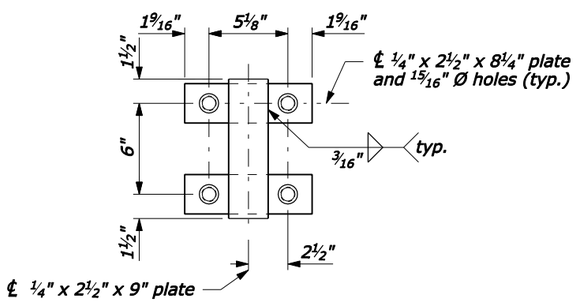

PLAN

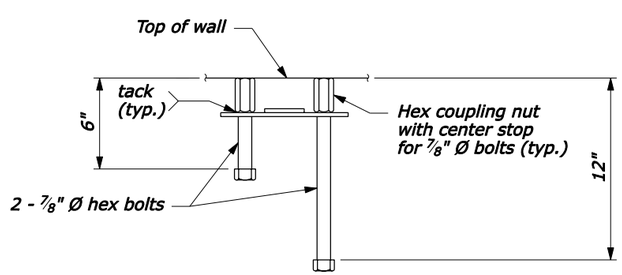

ELEVATION

ANCHOR ASSEMBLY

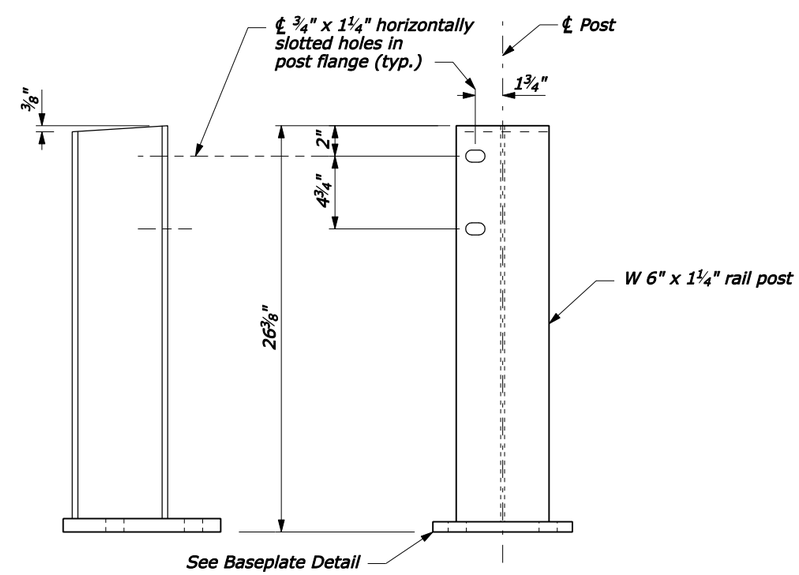

POST ASSEMBLY

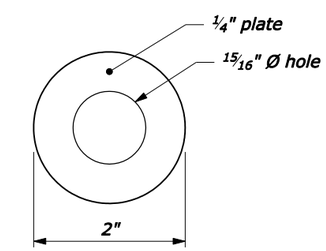

PLATE WASHER

NO SCALE

U.S. DEPARTMENT OF TRANSPORTATION
FEDERAL HIGHWAY ADMINISTRATION
FEDERAL LANDS HIGHWAY

U.S. CUSTOMARY STANDARD

STEEL TUBE-BACKED TIMBER BRIDGE RAIL

Sheet 2 of 3

STANDARD APPROVED FOR USE --/----

REVISED:
DRAFT: 6/2005

STANDARD 617-75

09-Jun-2005 04:08 PM

F:\StanDraw\Draft\V8\st61775.dgn [US Customary]

STATE	PROJECT	SHEET NUMBER

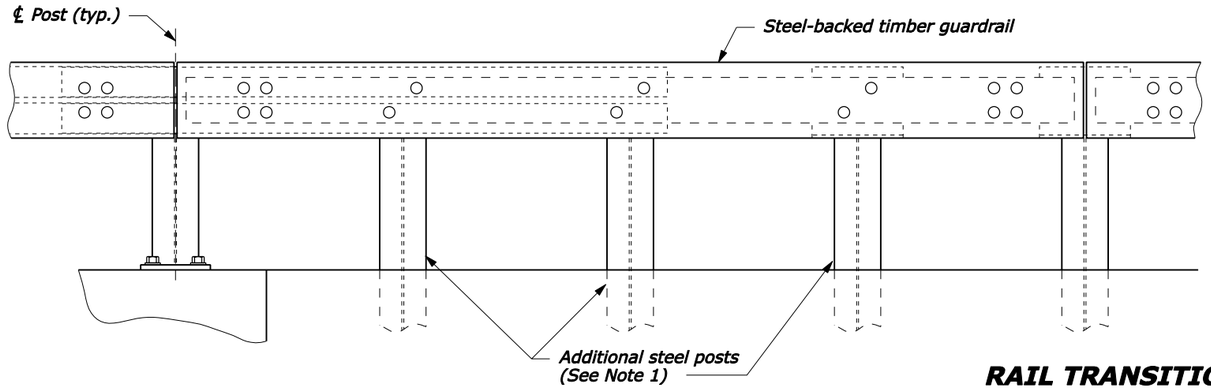

RAIL TRANSITION ELEVATION

NOTE:

1. At each additional post provide $2\frac{5}{8}$" Ø round head square neck bolts with plate washer and hex nut, a $\frac{3}{4}$" x $2\frac{1}{2}$" slot in steel plate, and $\frac{3}{4}$" Ø holes in timber rail, steel post, and timber block. See Standard 617-60, Steel-backed timber guardrail, Type A (modified for steel post).

FOR COMMENT

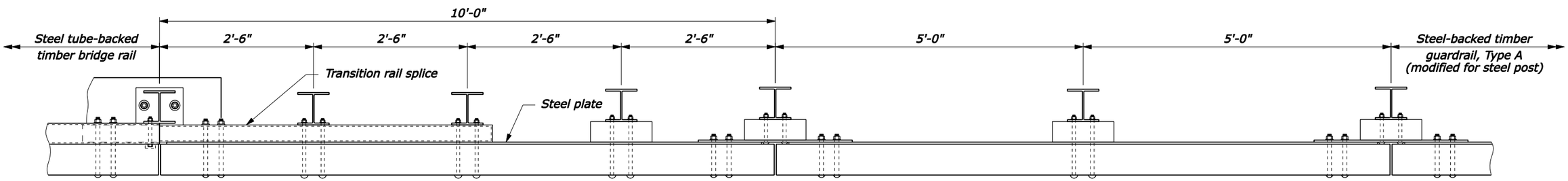

RAIL TRANSITION PLAN

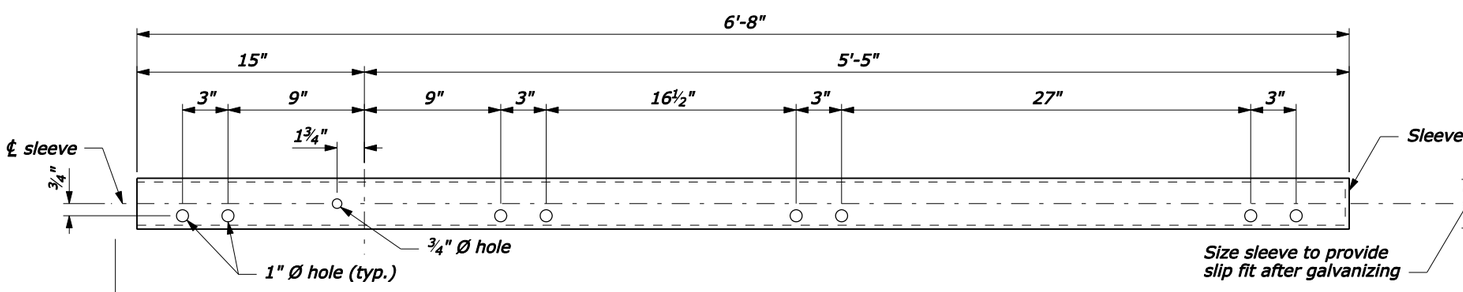

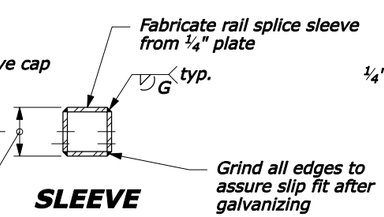

SLEEVE

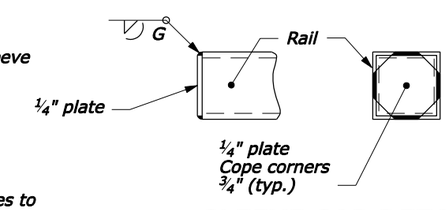

SLEEVE CAP DETAIL

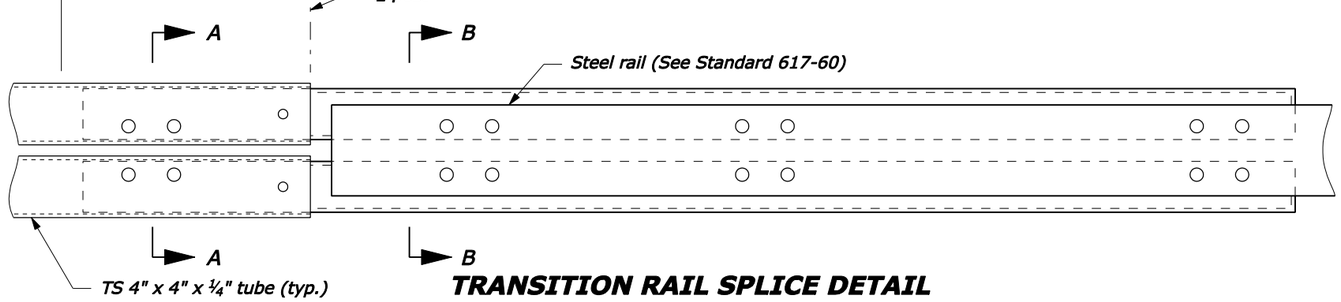

TRANSITION RAIL SPLICE DETAIL

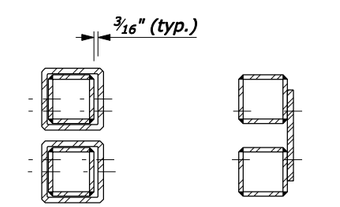

NO SCALE

U.S. DEPARTMENT OF TRANSPORTATION
FEDERAL HIGHWAY ADMINISTRATION
FEDERAL LANDS HIGHWAY

U.S. CUSTOMARY STANDARD

STEEL TUBE-BACKED TIMBER BRIDGE RAIL

Sheet 3 of 3

STANDARD APPROVED FOR USE --/----

REVISED:
DRAFT: 6/2005

STANDARD 617-75

F:\StanDraw\Draft\V8\st61775.dgn [US Customary] 09-Jun-2005 04:09 PM

STATE	PROJECT	SHEET NUMBER

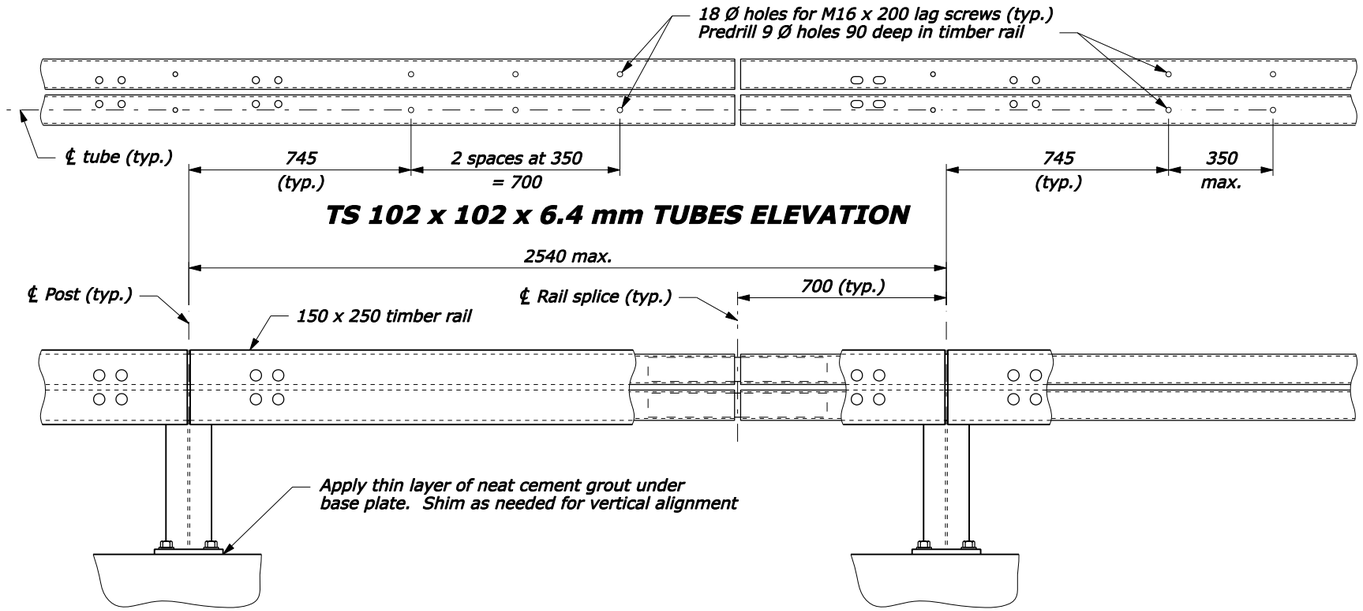

TS 102 x 102 x 6.4 mm TUBES ELEVATION

BRIDGE RAIL ELEVATION

NOTE:

1. Steel for rail posts, base plates, shims, splice sleeves, and anchor assembly plates conforms to ASTM A36. Structural tubing for rails conforms to ASTM A500, Grade B. Paint all metal components of the bridge rail except post base shims, anchor assemblies, and rail splice sleeves. Galvanize post base shims, anchor assemblies, and rail splice sleeves. Hex bolts conform to AASHTO M164 (ASTM A325). Hex coupling nuts conform to ASTM A563, Grade C, D, or DH and shall have a center stop. All other fasteners conform to ASTM A307. See Special Contract Requirements for painting.
2. Shop fabricate structural steel. Submit shop drawings to the CO for approval before fabrication. Provide drawings showing rail section lengths, splice locations, rail post spacing, and fastener lengths. Welding conforms to ANSI/AASHTO/AWS D1.5. Use a certified welder. Fabricate all steel before galvanizing or painting.
3. Section lengths of TS 102 x 102 rails shall be continuous over a minimum of three posts.
4. Provide neat cement grout consisting of a mixture of cement and water mixed to a smooth viscous paste.
5. Erect the rail parallel to grade.
6. Timber conforms to Subsection 710.08.
7. Dimensions without units are millimeters.

FOR COMMENT

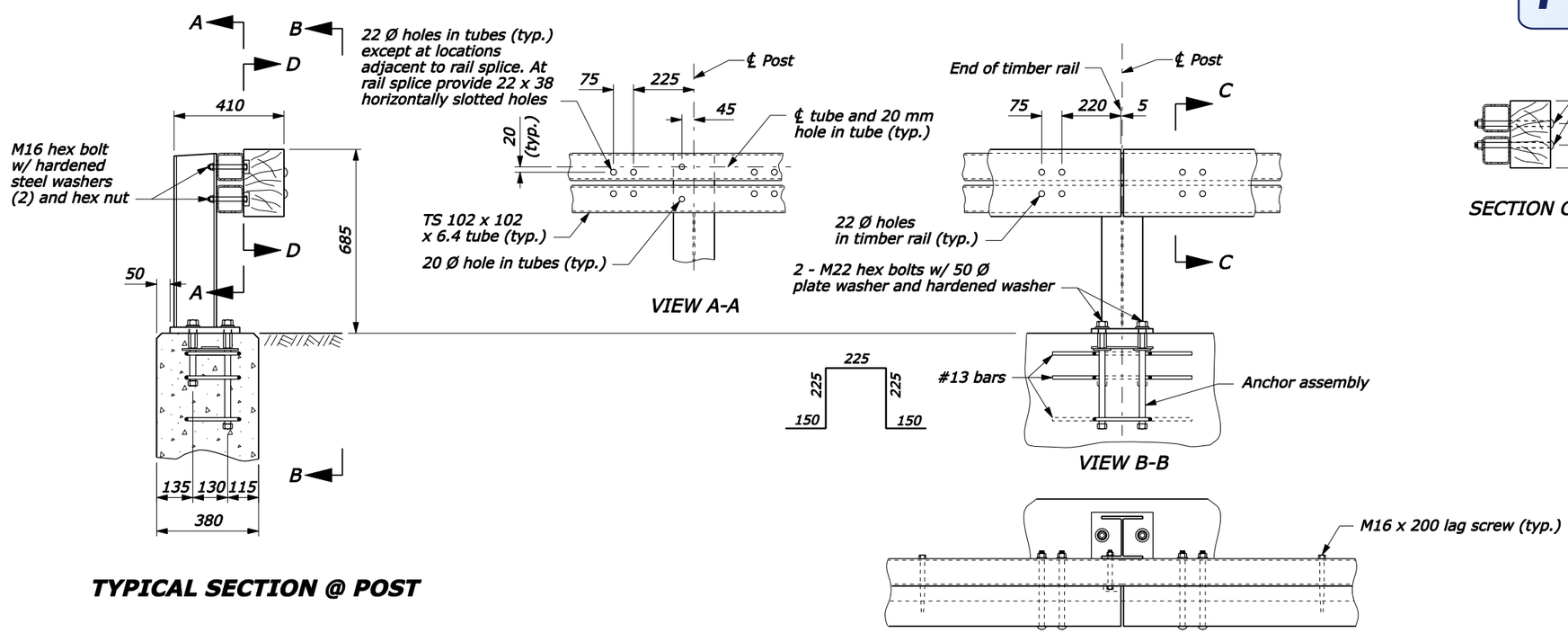

TYPICAL SECTION @ POST

PLAN VIEW @ POST

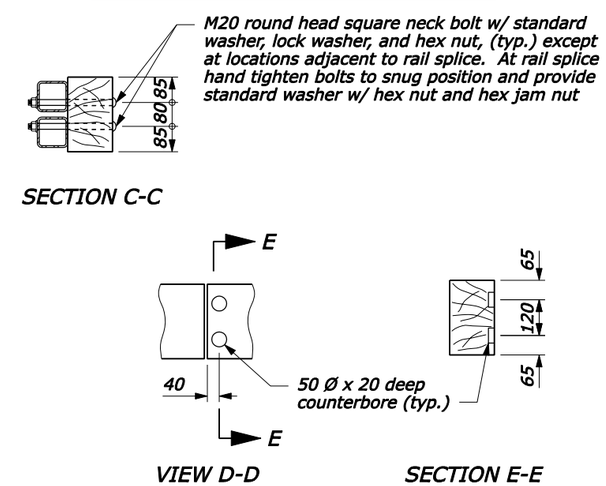

SECTION C-C

VIEW D-D

SECTION E-E

NO SCALE

U.S. DEPARTMENT OF TRANSPORTATION
FEDERAL HIGHWAY ADMINISTRATION
FEDERAL LANDS HIGHWAY

METRIC STANDARD

STEEL TUBE-BACKED TIMBER BRIDGE RAIL

Sheet 1 of 3

STANDARD APPROVED FOR USE --/----

REVISED:
DRAFT: 6/2005

STANDARD
M617-75

09-Jun-2005 04:02 PM
F:\StanDraw\Draft\V8\st61775.dgn [Metric]

STATE	PROJECT	SHEET NUMBER

NOTE:

1. Dimensions without units are millimeters.

FOR COMMENT

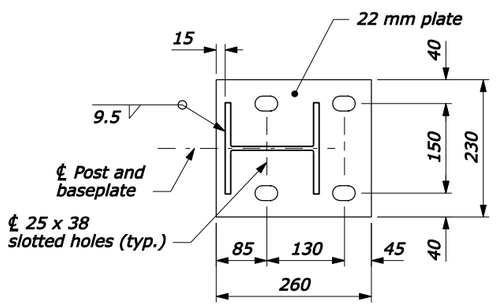

BASEPLATE DETAIL

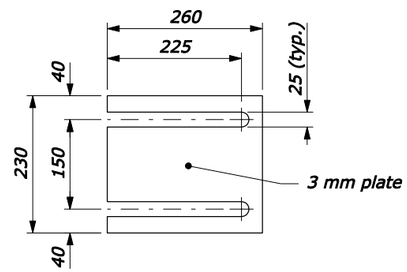

RAIL POST BASE SHIM

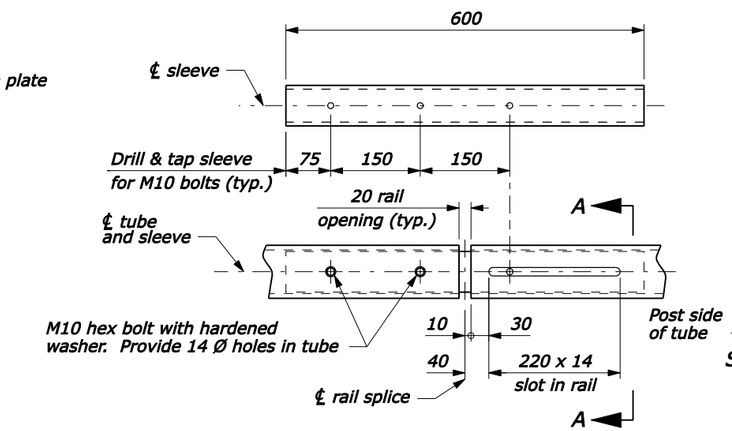

RAIL SPLICE DETAIL

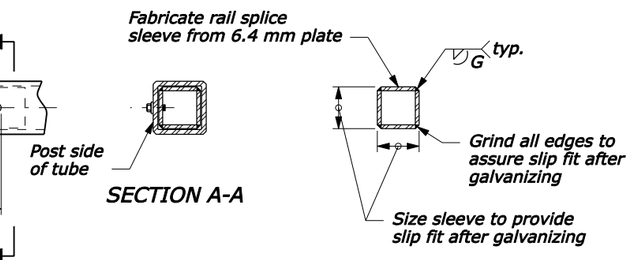

SLEEVE

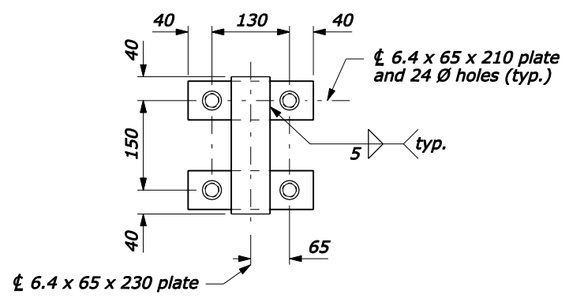

PLAN

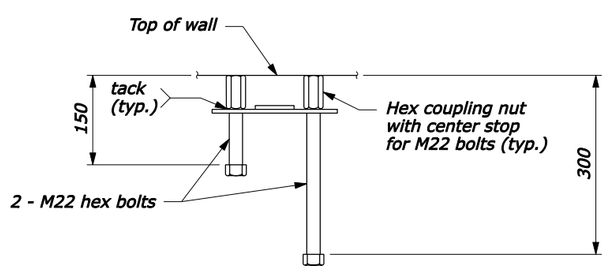

ELEVATION

ANCHOR ASSEMBLY

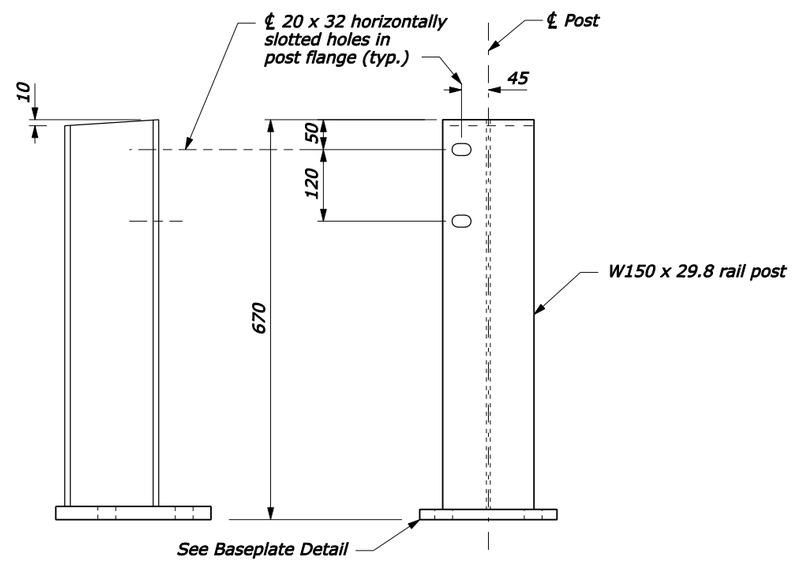

POST ASSEMBLY

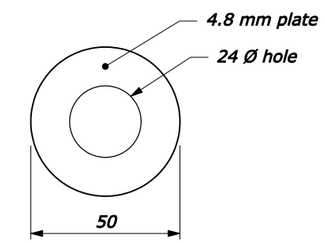

PLATE WASHER

NO SCALE

U.S. DEPARTMENT OF TRANSPORTATION
FEDERAL HIGHWAY ADMINISTRATION
FEDERAL LANDS HIGHWAY

METRIC STANDARD

STEEL TUBE-BACKED TIMBER BRIDGE RAIL

Sheet 2 of 3

STANDARD APPROVED FOR USE --/----

REVISED:
DRAFT: 6/2005

STANDARD
M617-75

F:\StanDraw\DraftV8\st61775.dgn [Metric] 09-Jun-2005 04:04 PM

STATE	PROJECT	SHEET NUMBER

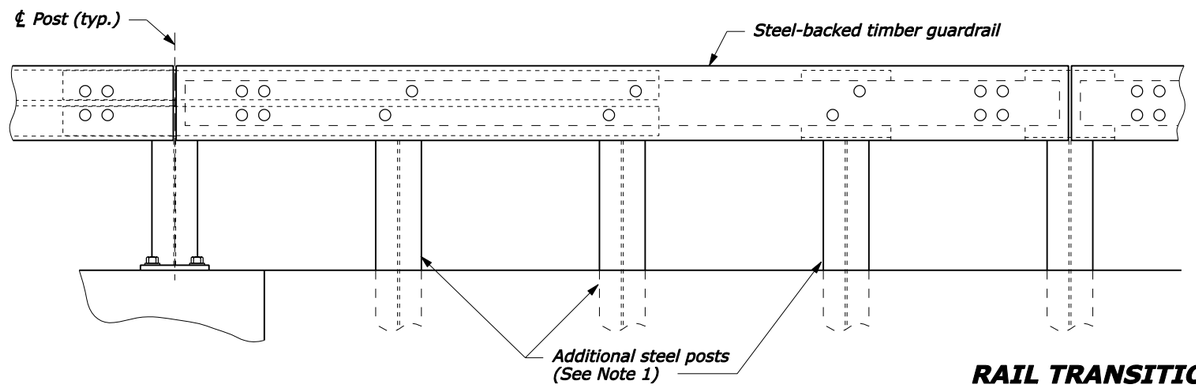

RAIL TRANSITION ELEVATION

NOTE:

1. At each additional post provide 2-M16 round head square neck bolts with plate washer and hex nut, a 20 x 60 slot in steel plate, and 18 mm Ø holes in timber rail, steel post, and timber block. See Standard M617-60, Steel-backed timber guardrail, Type A (modified for steel post).
2. Dimensions without units are millimeters.

FOR COMMENT

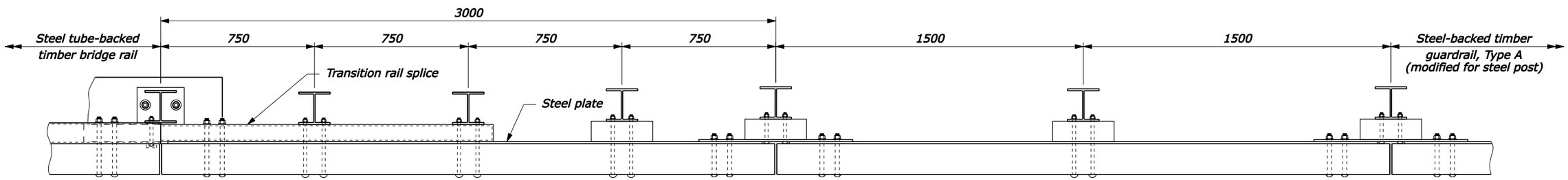

RAIL TRANSITION PLAN

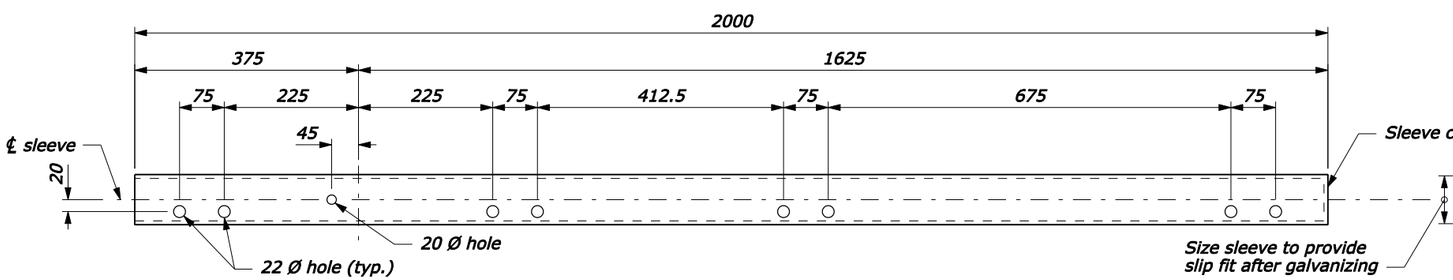

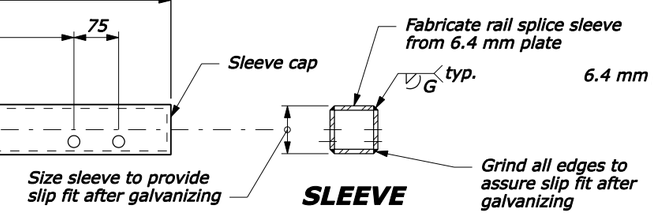

SLEEVE

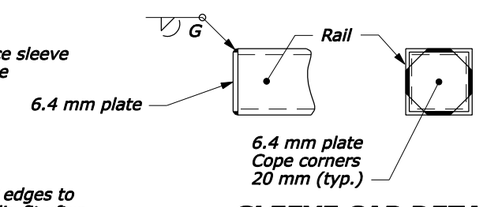

SLEEVE CAP DETAIL

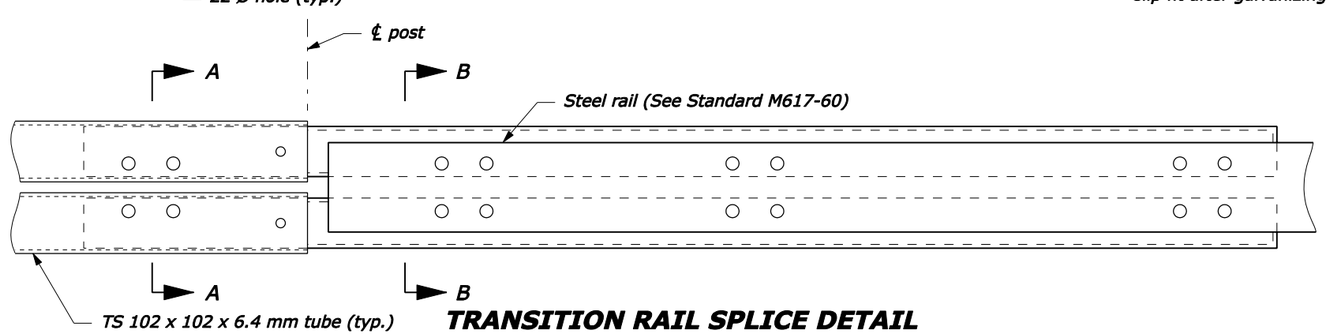

TRANSITION RAIL SPLICE DETAIL

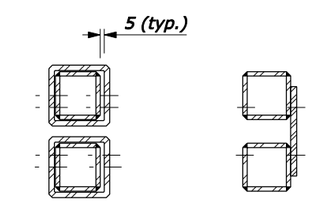

SECTION A-A SECTION B-B

NO SCALE

U.S. DEPARTMENT OF TRANSPORTATION
FEDERAL HIGHWAY ADMINISTRATION
FEDERAL LANDS HIGHWAY

METRIC STANDARD

STEEL TUBE-BACKED TIMBER BRIDGE RAIL

Sheet 3 of 3

STANDARD APPROVED FOR USE --/----

REVISED:
DRAFT: 6/2005

STANDARD
M617-75

09-Jun-2005 04:04 PM
F:\StanDraw\Draft\V8\st61775.dgn [Metric]

STATE	PROJECT	SHEET NUMBER

NOTE:

1. For details of the wood block-out, post notch, and general notes for Steel-Backed Log Guardrail. See Standard 617-81.

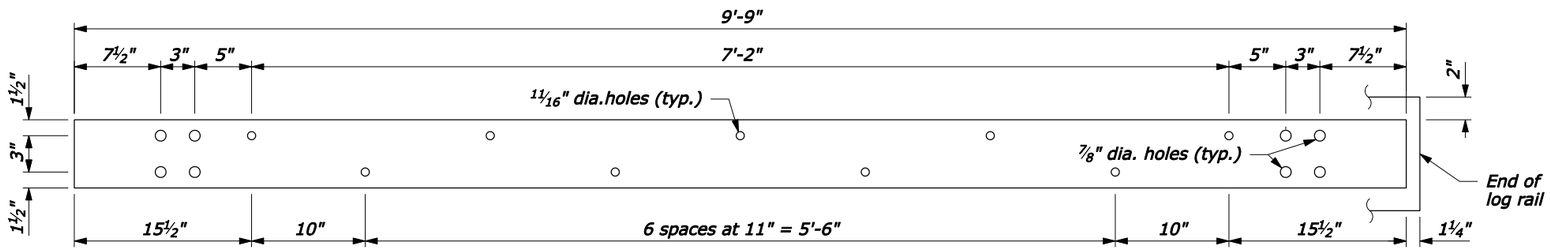

STEEL RAIL
6" x 3/8" x 9'-9"

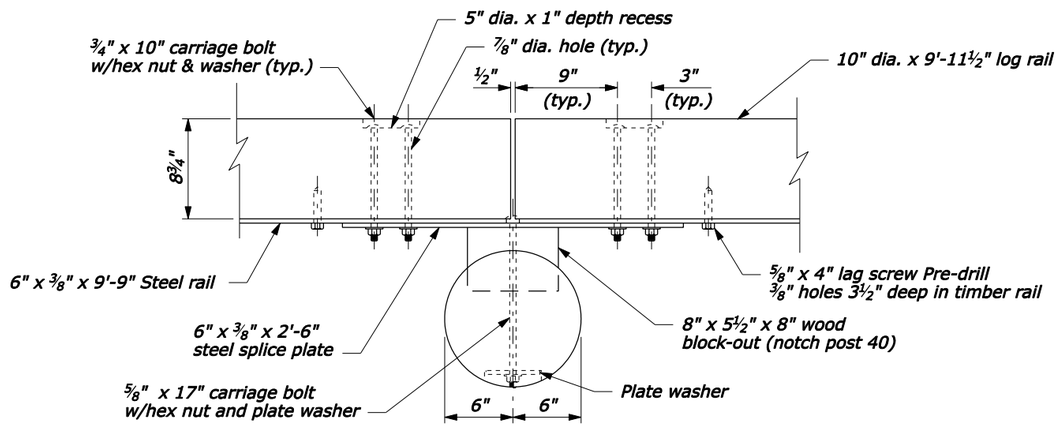

PLAN

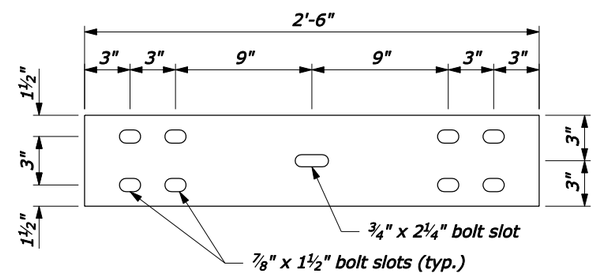

STEEL SPLICE PLATE
6" x 3/8" x 2'-6"

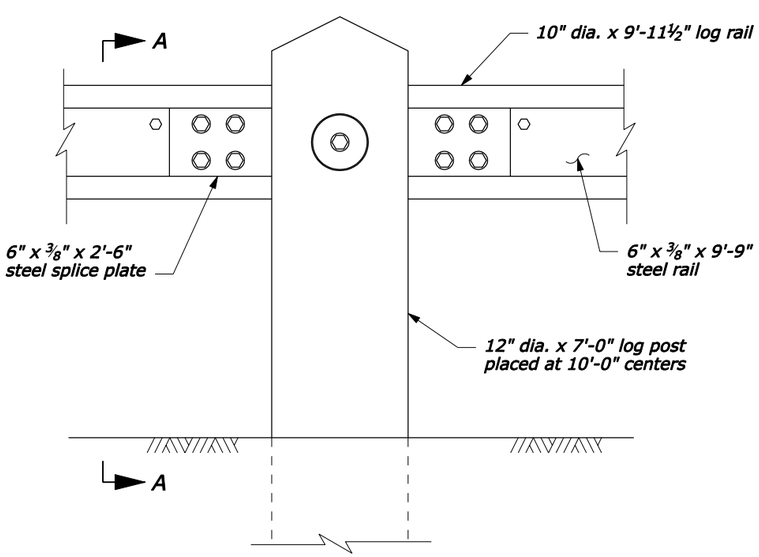

ELEVATION

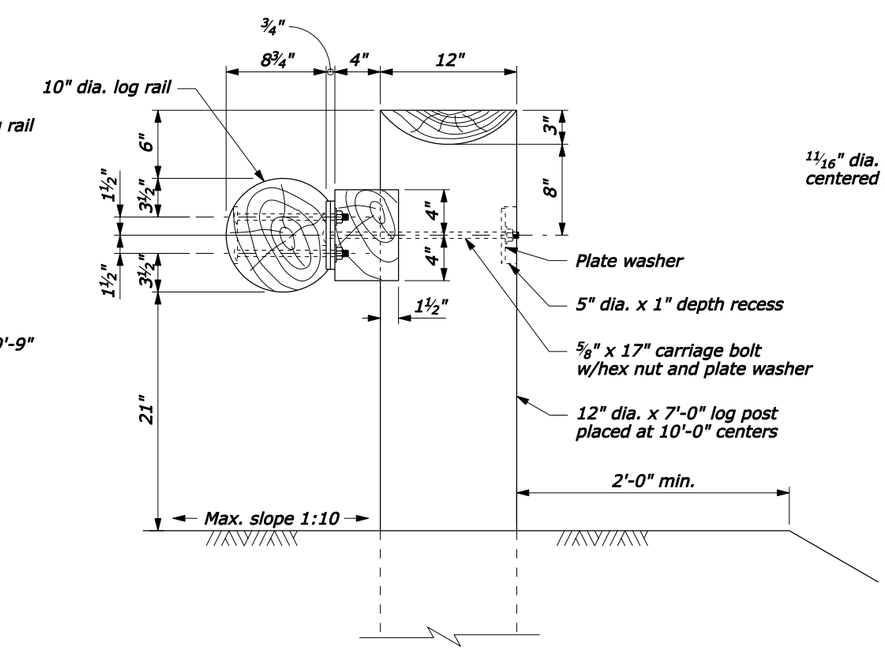

SECTION A-A

POST CONNECTION

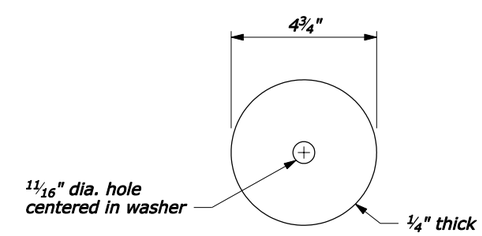

PLATE WASHER

NO SCALE

U.S. DEPARTMENT OF TRANSPORTATION
FEDERAL HIGHWAY ADMINISTRATION
FEDERAL LANDS HIGHWAY

U.S. CUSTOMARY STANDARD

STEEL-BACKED LOG RAIL

STANDARD APPROVED FOR USE 6/2005

REVISED:

STANDARD 617-80

F:\StanDraw\st61780.dgn [US Customary] 16-Jun-2005 03:10 PM

STATE	PROJECT	SHEET NUMBER

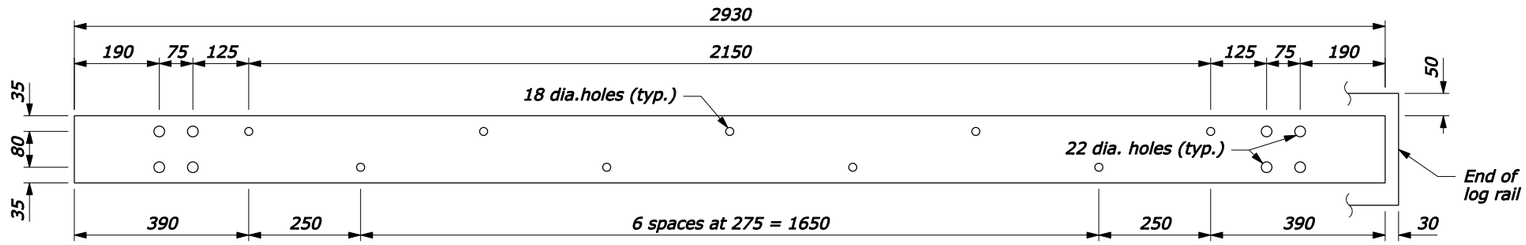

STEEL RAIL
150 x 10 x 2930

NOTE:

1. For details of the wood block-out, post notch, and general notes for Steel-Backed Log Guardrail. See Standard M617-81.
2. Furnish hardware in the metric sizes shown. Equivalent US Customary sizes may be used when metric sizes are not available.
3. Dimensions without units are millimeters.

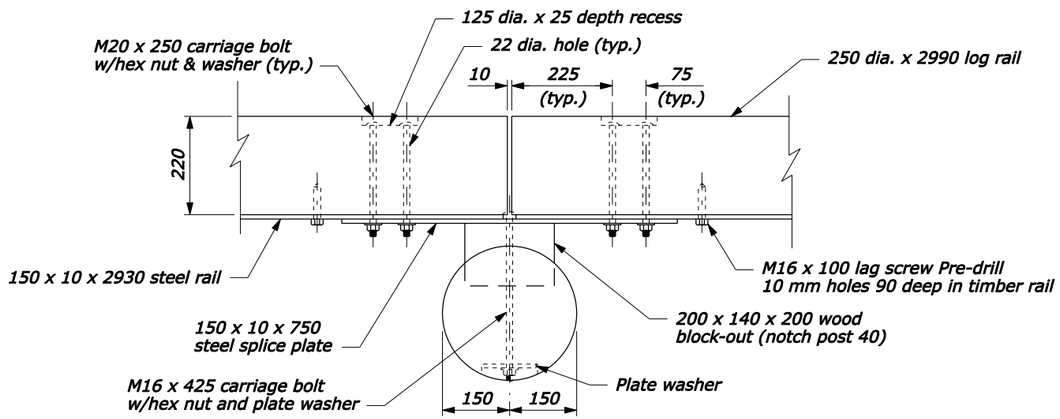

PLAN

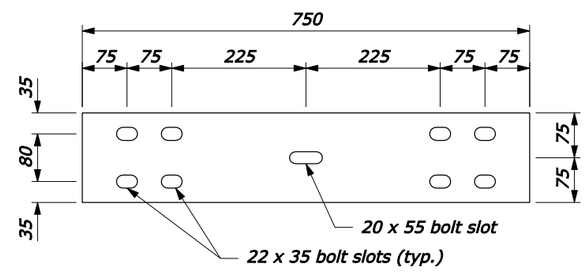

STEEL SPLICE PLATE
150 x 10 x 750

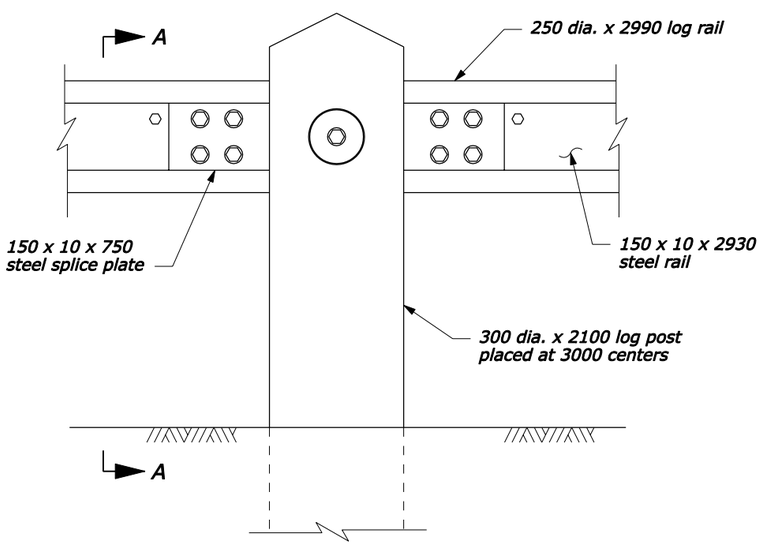

ELEVATION

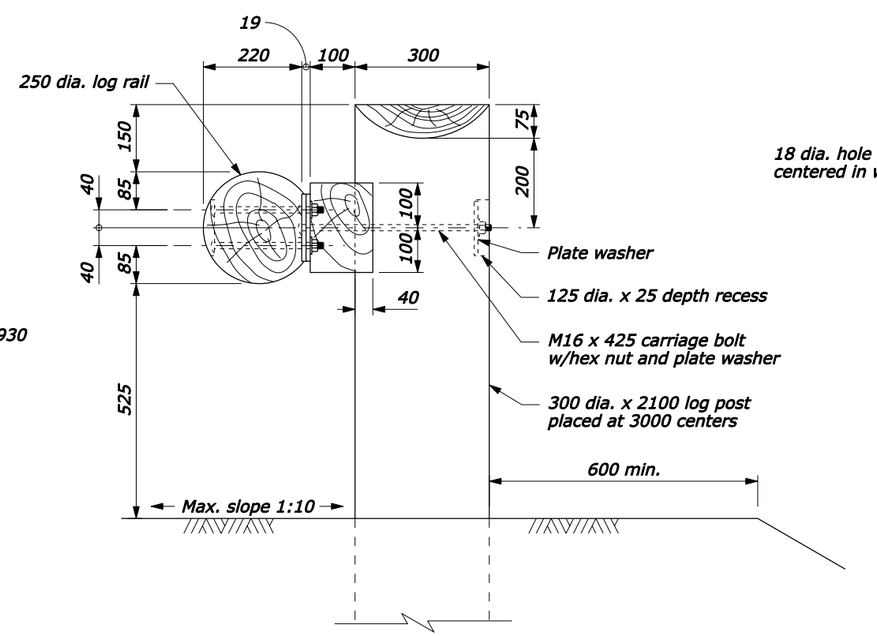

SECTION A-A

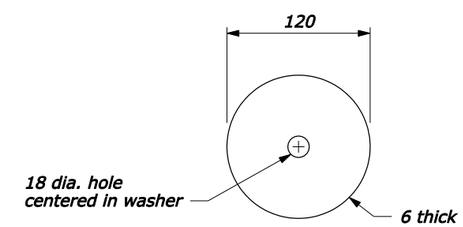

PLATE WASHER

POST CONNECTION

NO SCALE

U.S. DEPARTMENT OF TRANSPORTATION
FEDERAL HIGHWAY ADMINISTRATION
FEDERAL LANDS HIGHWAY

METRIC STANDARD

STEEL-BACKED LOG RAIL

STANDARD APPROVED FOR USE 3/1996
REVISED: 6/2005

STANDARD
M617-80

16-Jun-2005 03:09 PM
F:\StanDraw\st61780.dgn [Metric]

STATE	PROJECT	SHEET NUMBER

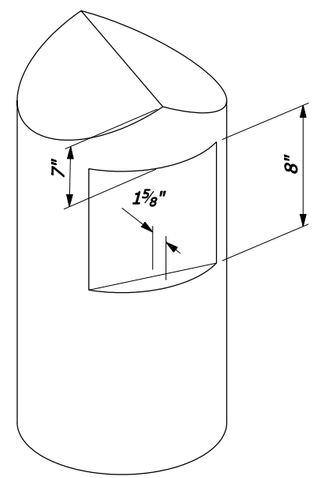

POST NOTCH FOR WOOD BLOCK-OUT

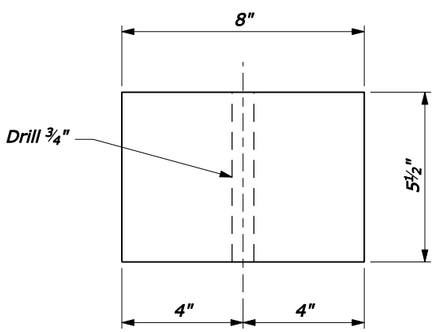

TOP

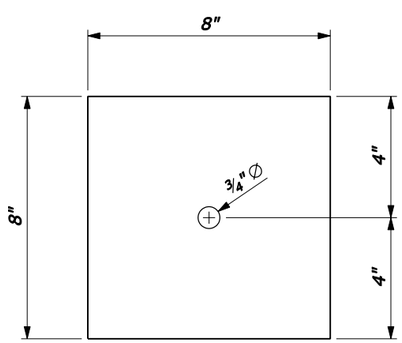

FRONT

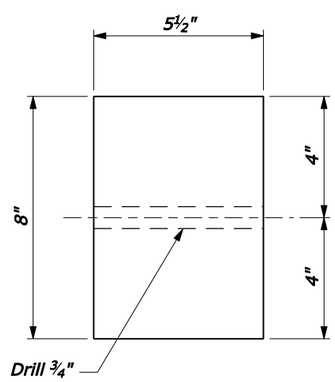

SIDE

WOOD BLOCK-OUT
8" x 5½" x 8"

NOTE:

1. Furnish post and rail elements of peeled, round Coastal Douglas-fir, Western hemlock, Western larch, Western pine, Jack pine or Lodgepole pine.
2. Treat post and rail elements with water-borne preservative CCA according to AWPA Standard C14.
3. Install logs for rails butt to butt and tip to tip. A 2" maximum taper between the butt and tip ends of individual logs is permitted.
4. 20 foot logs are acceptable for rails provided the 2" maximum taper requirement is met and roadway curvature permits.
5. Make splices in rail elements at posts only.
6. Field cut log ends and dress as necessary to obtain tight fitting butt joints in full contact with each other at the log ends. Trim traffic exposed faces of log ends at the joints and elsewhere and dress as necessary to obtain a smooth surface with no protrusions.
7. Dress back face of log rail members to provide a flat surface wide enough to accomodate a 6" steel rail.
8. Apply an approved tinted brown color stain to all exposed surfaces of logs. Apply stain either as a part of or subsequent to preservative treatment.
9. Treat all field cuts and drill holes with two applications of the same preservative and stain as the rails and posts.
10. Furnish structural steel conforming to AASHTO M222 (ASTM A588).
11. Furnish corrosion resistant fastener hardware manufactured from steel conforming to AASHTO M164, Type 3 (ASTM A325, Type 3).
12. The nominal bolt length is 16". Bolt lengths will vary according to log size. Extra long threaded bolts may be used, provided they are field cut so that none of the shank protrudes beyond the back of the post.

NO SCALE

U.S. DEPARTMENT OF TRANSPORTATION
FEDERAL HIGHWAY ADMINISTRATION
FEDERAL LANDS HIGHWAY

U.S. CUSTOMARY STANDARD

STEEL-BACKED LOG RAIL BLOCKOUT

STANDARD APPROVED FOR USE 6/2005
REVISED:

STANDARD
617-81

16-Jun-2005 03:32 PM
F:\StanDraw\st61781.dgn [US Customary]

STATE	PROJECT	SHEET NUMBER

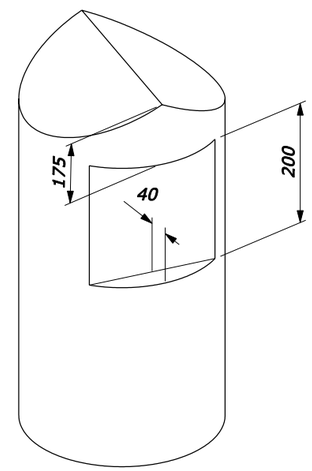

POST NOTCH FOR WOOD BLOCK-OUT

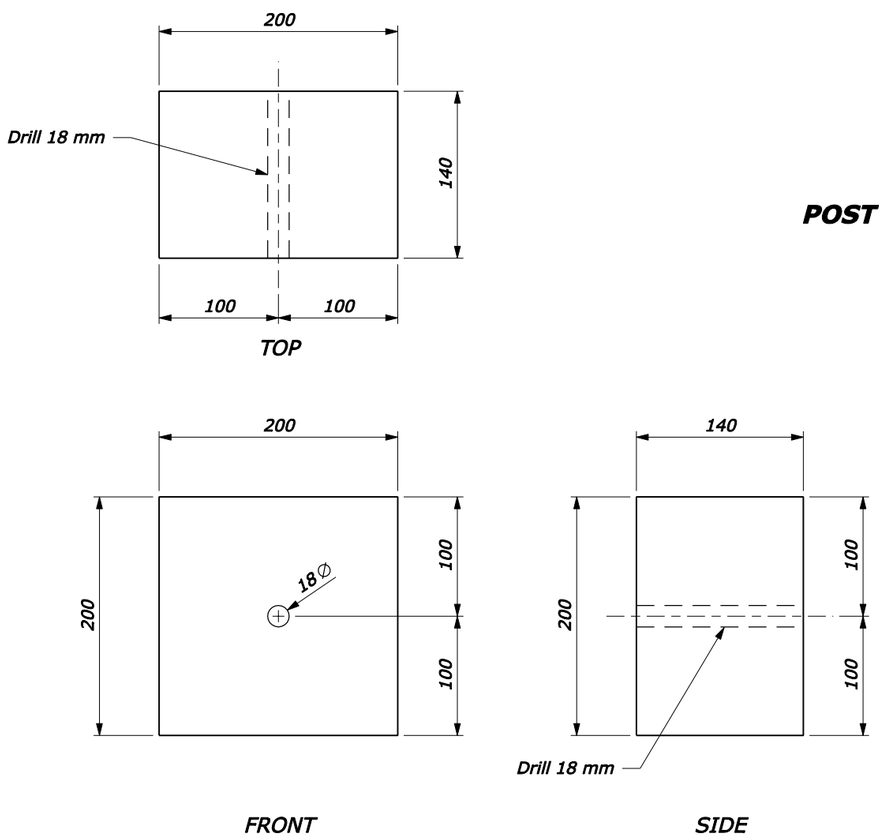

WOOD BLOCK-OUT
200 x 140 x 200

NOTE:

1. Furnish post and rail elements of peeled, round Coastal Douglas-fir, Western hemlock, Western larch, Western pine, Jack pine or Lodgepole pine.
2. Treat post and rail elements with water-borne preservative CCA according to AWPA Standard C14.
3. Install logs for rails butt to butt and tip to tip. A 50 mm maximum taper between the butt and tip ends of individual logs is permitted.
4. 6 meter logs are acceptable for rails provided the 50 mm maximum taper requirement is met and roadway curvature permits.
5. Make splices in rail elements at posts only.
6. Field cut log ends and dress as necessary to obtain tight fitting butt joints in full contact with each other at the log ends. Trim traffic exposed faces of log ends at the joints and elsewhere and dress as necessary to obtain a smooth surface with no protrusions.
7. Dress back face of log rail members to provide a flat surface wide enough to accomodate a 150 mm steel rail.
8. Apply an approved tinted brown color stain to all exposed surfaces of logs. Apply stain either as a part of or subsequent to preservative treatment.
9. Treat all field cuts and drill holes with two applications of the same preservative and stain as the rails and posts.
10. Furnish structural steel conforming to AASHTO M222 (ASTM A588).
11. Furnish corrosion resistant fastener hardware manufactured from steel conforming to AASHTO M164, Type 3 (ASTM A325, Type 3).
12. The nominal bolt length is 400 mm. Bolt lengths will vary according to log size. Extra long threaded bolts may be used, provided they are field cut so that none of the shank protrudes beyond the back of the post.
13. Dimensions without units are millimeters.

NO SCALE

U.S. DEPARTMENT OF TRANSPORTATION
FEDERAL HIGHWAY ADMINISTRATION
FEDERAL LANDS HIGHWAY

METRIC STANDARD

STEEL-BACKED LOG RAIL BLOCKOUT

STANDARD APPROVED FOR USE 3/1996
REVISED: 6/2005

STANDARD
M617-81

16-Jun-2005 03:31 PM
F:\StanDraw\std61781.dgn [Metric]

STATE	PROJECT	SHEET NUMBER

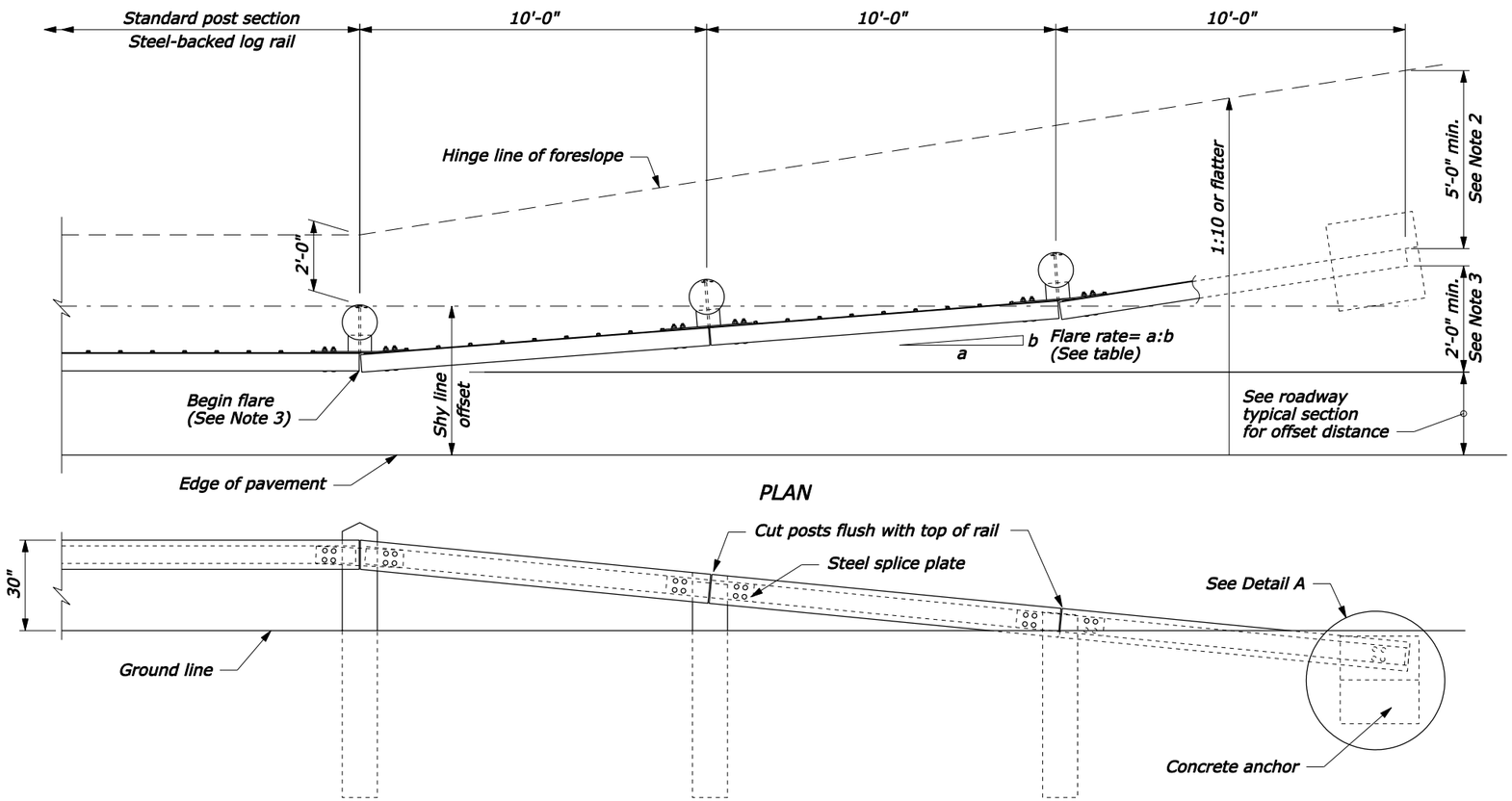

APPROACH & DEPARTURE FLARE WITH FLARED ANCHOR TERMINAL (FAT)

NOTE:

1. See Standard 617-80 and 617-81, Steel-Backed Log Rail, for timber, structural steel, and hardware details.
2. Extend the fill widening a minimum of 5 feet behind the guardrail, unless otherwise directed by the CO.
3. The guardrail flare shown in the plan view is the minimum length and rate required. As directed by the CO, flare the guardrail so that the terminal section is outside the clear zone. If the terminal section cannot be located outside the clear zone, it should be flared as far as practical from the road at the maximum rate indicated on the Guardrail Flare Rates table.

GUARDRAIL FLARE RATE TABLE

Design Speed (mph)	Shy line offset (ft)	Flare rate inside shy line (a:b)	Flare rate outside shy line (a:b)
60	8.0	26:1	14:1
50	6.5	21:1	11:1
40	5.0	16:1	8:1
40 or less	3.5	13:1	7:1

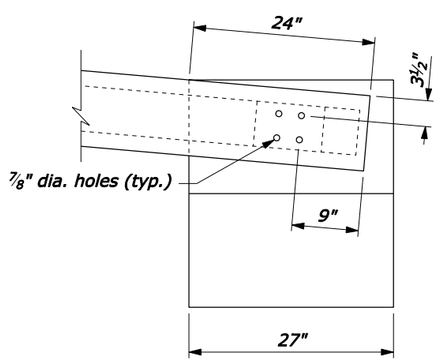

DETAIL A

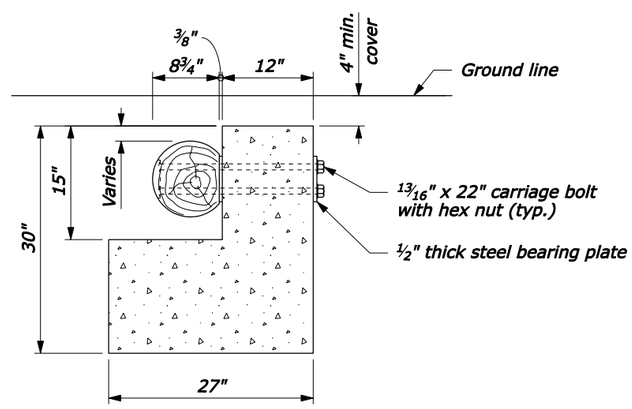

SECTION A-A

CONCRETE ANCHOR

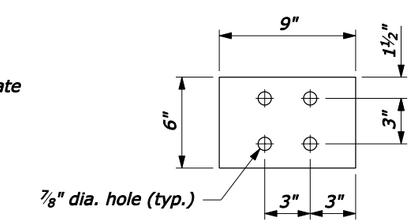

STEEL BEARING PLATE

NO SCALE

U.S. DEPARTMENT OF TRANSPORTATION
FEDERAL HIGHWAY ADMINISTRATION
FEDERAL LANDS HIGHWAY

U.S. CUSTOMARY STANDARD

STEEL-BACKED LOG RAIL TERMINAL SECTION, TYPE FAT-9

STANDARD APPROVED FOR USE 6/2005

REVISED:

STANDARD 617-82

16-Jun-2005 03:40 PM

F:\StanDraw\std1782.dgn [US Customary]

STATE	PROJECT	SHEET NUMBER

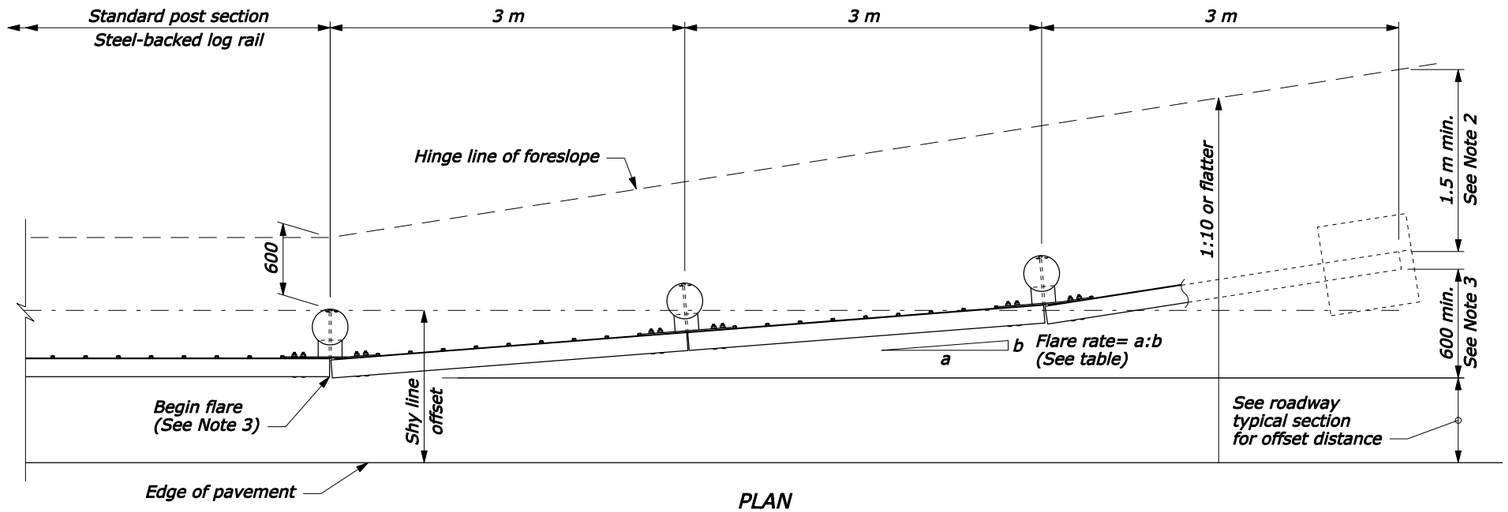

PLAN

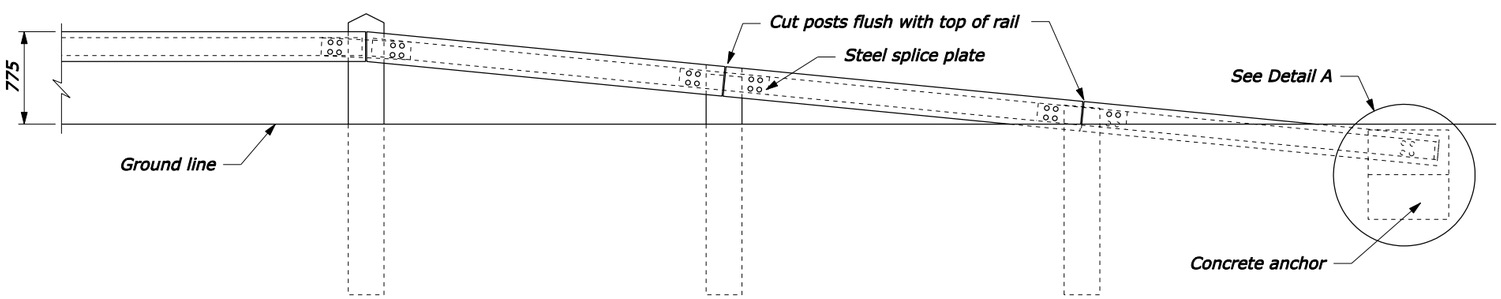

ELEVATION

APPROACH & DEPARTURE FLARE WITH FLARED ANCHOR TERMINAL (FAT)

NOTE:

1. See Standard M617-80 and M617-81, Steel-Backed Log Rail, for timber, structural steel, and hardware details.
2. Extend the fill widening a minimum of 1.5 m behind the guardrail, unless otherwise directed by the CO.
3. The guardrail flare shown in the plan view is the minimum length and rate required. As directed by the CO, flare the guardrail so that the terminal section is outside the clear zone. If the terminal section cannot be located outside the clear zone, it should be flared as far as practical from the road at the maximum rate indicated on the Guardrail Flare Rates table.
4. Funish hardware in the metric sizes shown. Equivalent US Customary sizes may be used when metric sizes are not available.
5. Dimensions without units are millimeters.

GUARDRAIL FLARE RATE TABLE			
Design Speed (km/h)	Shy line offset (m)	Flare rate inside shy line (a:b)	Flare rate outside shy line (a:b)
100	2.5	26:1	14:1
80	2.0	21:1	11:1
60	1.5	16:1	8:1
50 or less	1.0	13:1	7:1

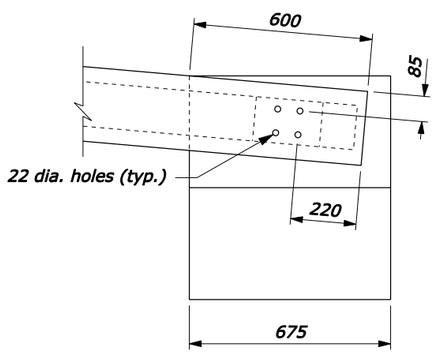

DETAIL A

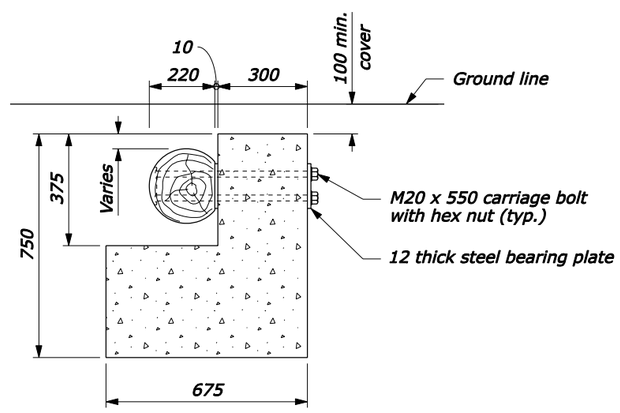

SECTION A-A

CONCRETE ANCHOR

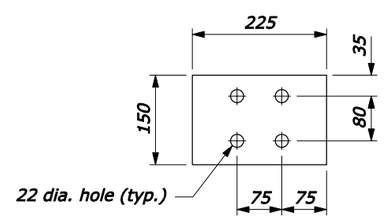

STEEL BEARING PLATE

NO SCALE

U.S. DEPARTMENT OF TRANSPORTATION
FEDERAL HIGHWAY ADMINISTRATION
FEDERAL LANDS HIGHWAY

METRIC STANDARD

STEEL-BACKED LOG RAIL TERMINAL SECTION, TYPE FAT-9

STANDARD APPROVED FOR USE 6/2005

REVISED:

STANDARD
M617-82

16-Jun-2005 03:38 PM

F:\StanDraw\st61782.dgn [Metric]