STATE	PROJECT	SHEET NUMBER

NOTE:

1. Dimensions without units are millimeters.

CATTLE GUARD

REINFORCING STEEL, CONCRETE, STRUCTURAL STEEL, AND GRID UNIT TABLE OF QUANTITIES

	DESCRIPTION	NOMINAL CATTLE GUARD WIDTH																														REMARKS
		3.6 m		4.2 m		4.8 m		5.4 m		6.0 m		6.6 m		7.2 m		7.8 m		8.4 m		9.0 m		9.6 m		10.2 m		10.8 m		11.4 m		12.0 m		12.6 m		
		QUAN.	LGTH.	QUAN.	LGTH.	QUAN.	LGTH.	QUAN.	LGTH.	QUAN.	LGTH.	QUAN.	LGTH.	QUAN.	LGTH.	QUAN.	LGTH.	QUAN.	LGTH.	QUAN.	LGTH.	QUAN.	LGTH.	QUAN.	LGTH.	QUAN.	LGTH.	QUAN.	LGTH.	QUAN.	LGTH.	QUAN.	LGTH.	
	#13 Reinforcing bars, A1	8	2300	8	2300	8	2300	8	2300	8	2300	8	2300	8	2300	8	2300	8	2300	8	2300	8	2300	8	2300	8	2300	8	2300	8	2300	8	2300	
	#13 Reinforcing bars, A2	20	2150	20	2150	20	2150	20	2150	20	2150	20	2150	20	2150	20	2150	20	2150	20	2150	20	2150	20	2150	20	2150	20	2150	20	2150	20	2150	See Bar Bending Detail
	#13 Reinforcing bars, A3	32	2700	36	2700	40	2700	46	2700	50	2700	54	2700	60	2700	64	2700	70	2700	74	2700	80	2700	84	2700	90	2700	94	2700	98	2700	102	2700	See Bar Bending Detail
	#13 Reinforcing bars, A4	10	3900	10	4500	10	5100	10	5700	10	6300	10	6900	10	7500	10	8100	10	8700	10	9300	100	9900	10	10500	10	11100	10	11300	10	12300	10	12900	
	#13 Reinforcing bars, A5	8	3500	8	4100	8	4700	8	5300	8	5900	8	6500	8	7100	8	7700	8	8300	8	8900	8	9500	8	10100	8	10700	8	11700	8	11900	8	12500	
	Grid unit A (1.8 m)	2		1				3		2		1				3		2		5				3		6		1				7		See Grid Unit List of Materials
	Grid unit B (2.4 m)			1		2				1		2		3		1		2				4		2				4		5				See Grid Unit List of Materials
	Concrete lateral supports, m3	1.19		1.19		1.19		1.19		1.19		1.19		1.19		1.19		1.19		1.19		1.19		1.19		1.19		1.19		1.19		1.15		
	Concrete end supports, m3	3.07		3.59		4.11		4.62		5.12		5.66		6.16		6.67		7.19		7.71		8.21		8.73		9.24		9.76		10.26		10.78		
	Total concrete, m3	4.26		4.78		5.30		5.81		6.31		6.85		7.35		7.86		8.38		8.90		9.40		9.92		10.43		10.95		11.45		11.93		
*Structural steel, kg	W 200 x 27 beams	416		468		540		624		676		728		780		884		936		1040		1040		1144		1248		1248		1300		1456		Beams 27 kg/m
	Rail, ASCE 40	920		1073		1226		1380		1533		1686		1839		1993		2146		2300		2452		2606		2760		2912		3065		3220		19.82 kg/m
	Rail, Type I	360		420		480		540		600		660		720		780		840		900		960		1020		1080		1140		1200		1260		Approx. 7.77 kg/m
	Rail, Type II	472		552		632		708		788		868		945		1024		1104		1180		1264		1340		1416		1500		1580		1652		10.2 kg/m
	Reinforcing steel, kg	101.0		109.5		118.0		126.5		135.0		143.5		152.0		160.5		169.0		177.5		186.0		194.5		203.0		211.5		220.0		493		0.994 kg/m

* Structural steel weights do not include hardware or guard angle.

CATTLE GUARD WING

LIST OF MATERIALS PER WING
(TWO REQUIRED PER INSTALLATION)

PART DESCRIPTION	WOOD WING	ANGLE IRON WING	ALUMINUM TUBING WING
Outside diagonal supports	Two 50 x 150 x 2100 mm treated S4S	Two 51 x 51 x 6.4 x 2210 mm galvanized steel angle	One 50 mm OD x 3.17 x 4200 mm aluminum tubing
Middle support	One 50 x 150 x 1800 mm treated S4S	One 51 x 51 x 6.4 x 1850 mm galvanized steel angle	
Horizontal brace no.1	One 50 x 150 x 1675 mm treated S4S	One 12 mm x 1980 mm galvanized steel bar	One 50 mm OD x 3.17 x 1830 mm aluminum tubing
No. 2	One 50 x 150 x 1220 mm treated S4S	One 12 mm x 1675 mm galvanized steel bar	One 50 mm OD x 3.17 x 760 mm aluminum tubing
No. 3	One 50 x 150 x 455 mm treated S4S	One 12 mm x 1370 mm galvanized steel bar	None
No. 4	None	One 12 mm x 990 mm galvanized steel bar	None
No. 5	None	One 12 mm x 610 mm galvanized steel baro	None
No. 6	None	One 12 mm x 225 mm galvanized steel bar	None
Post	150 x 150 x 2400 mm treated S4S	One 150 x 150 x 2100 mm treated S4S or approved alternate	One 150 x 150 x 2400 mm treated S4S or approved alternate
Top anchor assembly	Toenail diagonal supports to the post with 16d galvanized nails as required.	M10 x 150 mm galvanized hex bolt w/nut and flat washer	M20 x 400 mm galvanized steel rod threaded on one end w/nut and washers & 75 mm radius hook in other end.
Bottom anchor assembly	50 x 200 x 2400 mm treated S4S sill attached to concrete w/3 each M12 x 175 mm hex bolts w/nuts & washers embedded in concrete. Toenail diagonal supports to wooden sill w/16d galvanized nails.	3 each M10 x 150 mm galvanized hex bolts embeded in concrete. Attach steel L iron to bolt w/flat washer and nut	2 each 6.4 x 125 x 250 mm flat irons welded to 100 mm tubing. 4 each M10 x 150 mm galvanized hex bolts embedded in concrete. Attach the flat iron plates to the bolts with washer & nuts.

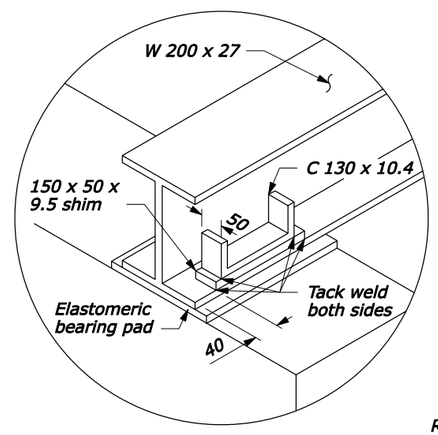

DETAIL A

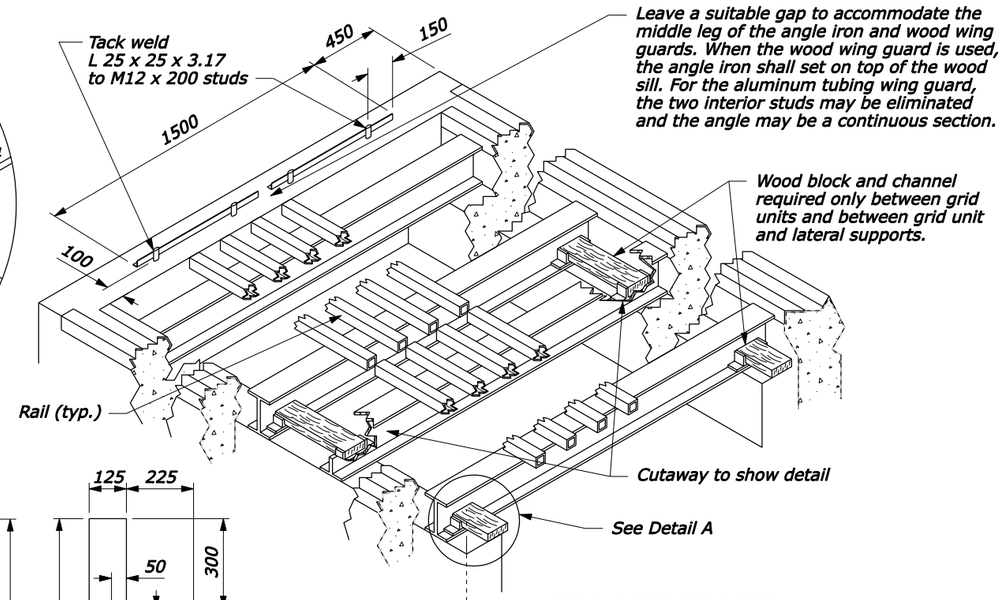

ISOMETRIC VIEW

GRID UNIT LIST OF MATERIALS

GRID UNIT TYPE A

4 each W 200 x 27 x 1925 mm long 13 each ASCE 40 crane rail (with minimum spacing), or II tubular cross bar sections, (with minimum spacing), Type I or Type II, 1780 mm

GRID UNIT TYPE B

5 each W 200 x 27 x 1925 mm long 13 each ASCE 40 crane rail (with minimum spacing), or II tubular cross bar sections, (with minimum spacing), Type I or Type II, 2380 mm

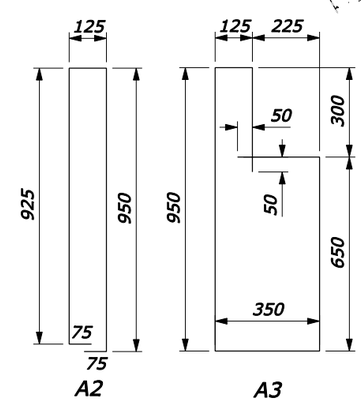

A2 A3

BAR BENDING DETAIL

NO SCALE

U.S. DEPARTMENT OF TRANSPORTATION
FEDERAL HIGHWAY ADMINISTRATION
FEDERAL LANDS HIGHWAY

METRIC STANDARD

CATTLE GUARD

STANDARD APPROVED FOR USE 3/1996
REVISED: 5/1997 6/2005

STANDARD
M619-2

16-Jun-2005 01:54 PM
F:\StanDraw\sts1902.dgn [Metric]