STATE	PROJECT	SHEET NUMBER

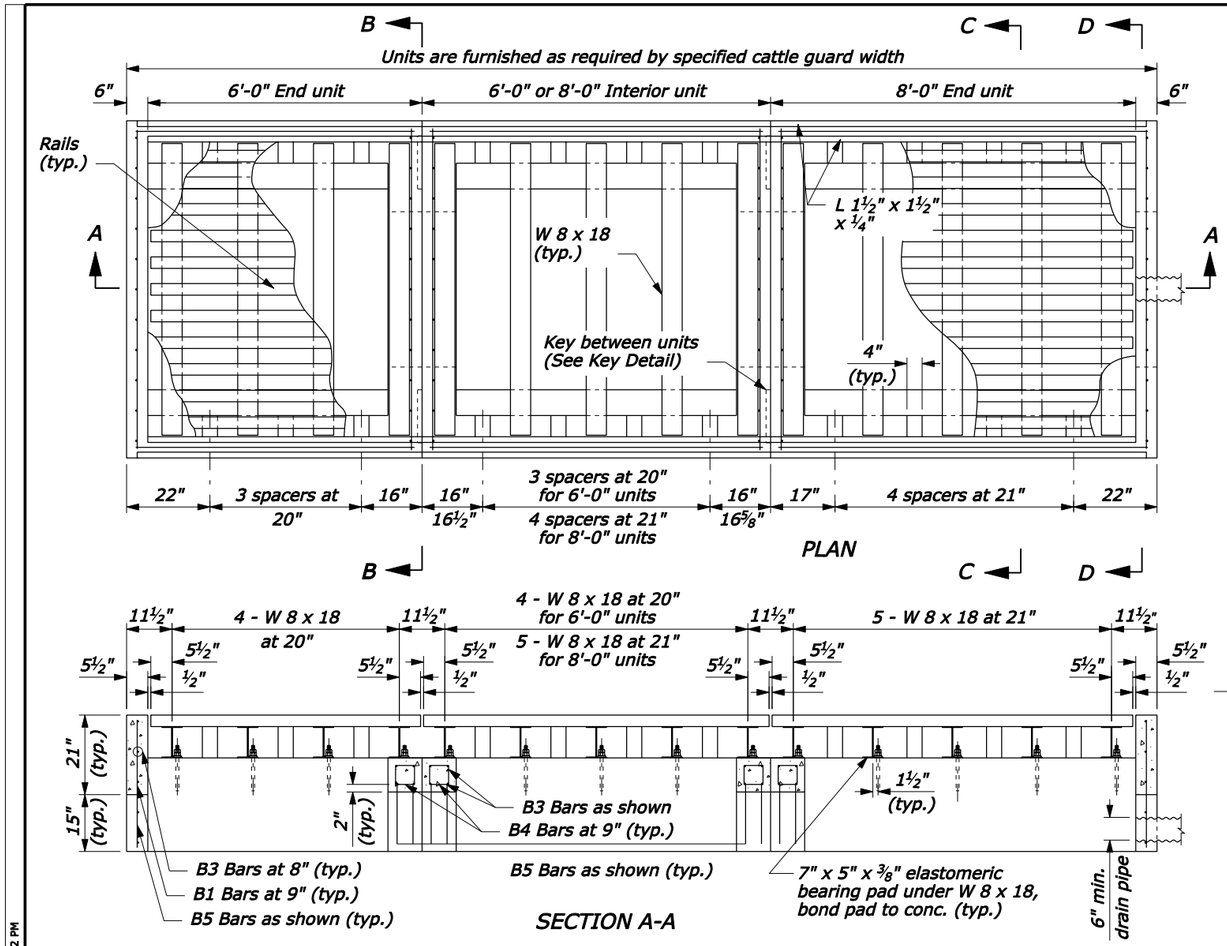

PLAN

SECTION A-A

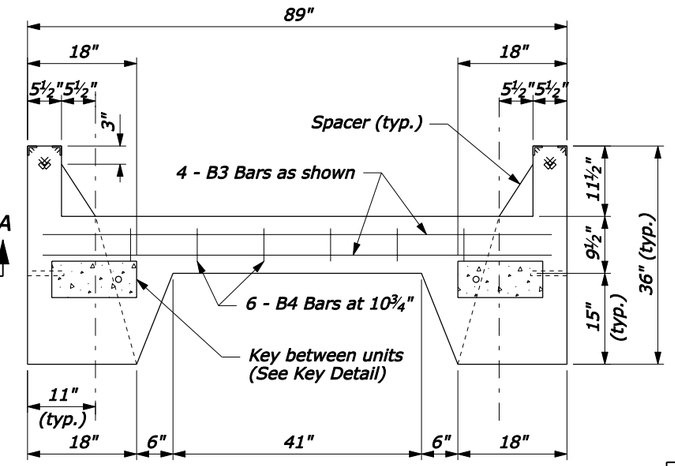

SECTION B-B

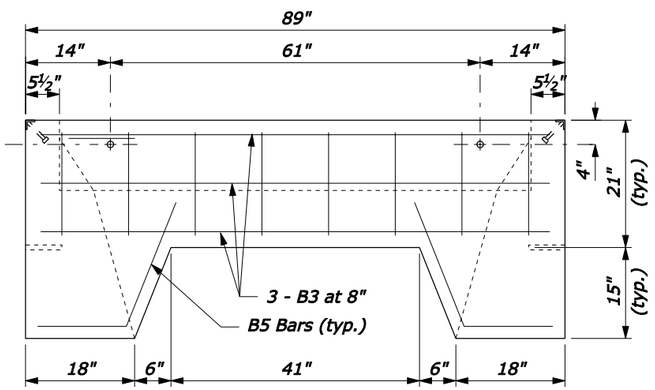

SECTION D-D

NOTE:

1. See Standard 619-1 for reinforcing steel size and grade.
2. See Standard 619-2 for cattle guard wing details. Fabricate end units to accommodate selected cattle guard wing.
3. Minimum soil bearing 4,000 lb/ft2. Place units in fine aggregate bed 3 inch thick over hand leveled soil compacted to not less than 95 percent density.
4. Chamfer exposed concrete edges ¾" unless otherwise shown. Give all concrete surfaces a Class 1 finish.
5. Approved alternate designs may be used.

PRECAST CATTLE GUARD

REINFORCING STEEL AND CONCRETE

UNIT	No. of BARS	BAR MARK	LENGTH	MASS LB	CONCRETE CUYD
6'-0" END	7	B3	85"	33.1	1.89
	10	B2	74"	41.2	
	8	B1	17"	7.6	
	6	B4	26"	8.7	
	18	B6	70"	70.1	
	6	B5	36"	12.0	
6'-0" INTERIOR	8	B3	85"	37.9	1.90
	10	B2	68"	37.9	
	12	B4	26"	17.4	
	18	B6	70"	70.1	
	8	B5	36"	16.0	
8'-0" INTERIOR	8	B3	85"	37.9	2.34
	10	B2	92"	51.2	
	12	B4	26"	17.4	
	20	B6	70"	77.9	
	8	B5	36"	16.0	
8'-0" END	7	B3	85"	33.1	2.32
	10	B2	98"	54.6	
	8	B1	17"	7.6	
	6	B4	26"	8.7	
	20	B6	70"	77.9	
	6	B5	36"	12.0	

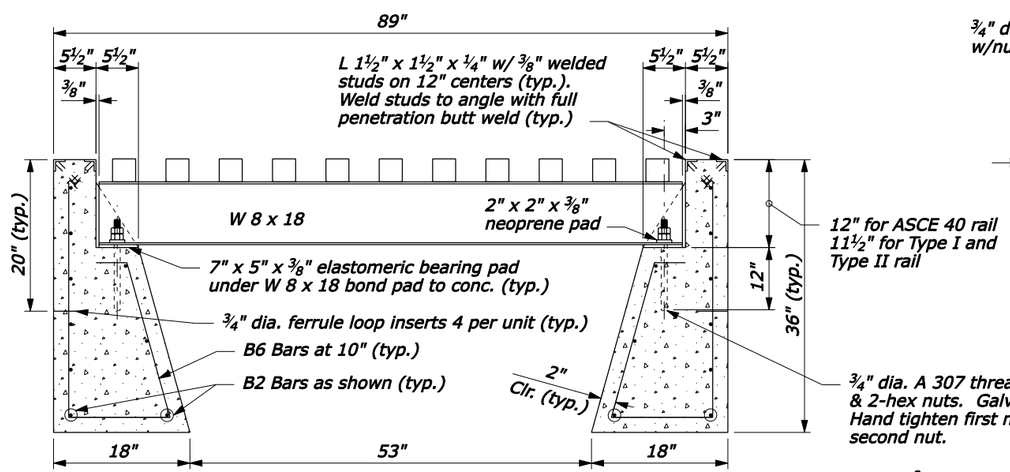

SECTION C-C

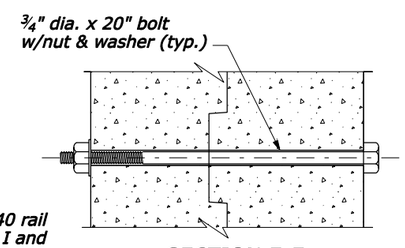

SECTION E-E

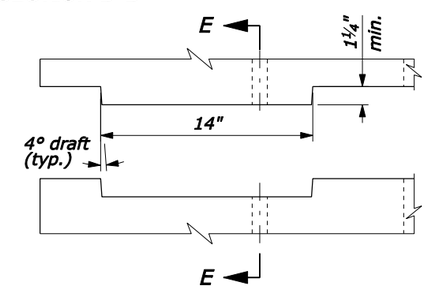

PLAN

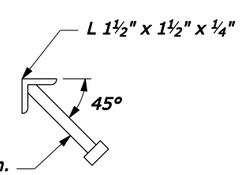

4" long ⅜" dia. anchor stud. Space anchors at 12" centers. Weld to angle with full penetration butt weld. Galvanize each assembly after fabrication.

GUARD ANGLE DETAIL

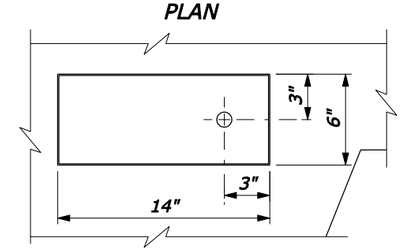

ELEVATION

KEY DETAIL

NO SCALE

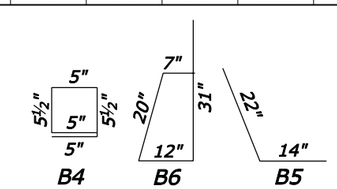

BAR BENDING DETAIL

U.S. DEPARTMENT OF TRANSPORTATION
FEDERAL HIGHWAY ADMINISTRATION
FEDERAL LANDS HIGHWAY

U.S. CUSTOMARY STANDARD

CATTLE GUARD PRECAST FOUNDATION

STANDARD APPROVED FOR USE 6/2005

REVISED:

STANDARD 619-3

16-Jun-2005 02:22 PM

F:\StanDraw\st61903.dgn [US Customary]