STATE	PROJECT
OR	PFH 244-1(1)

Station 19+320 @ 20' left of center line

Sta 19+320

V = 12.5 m³

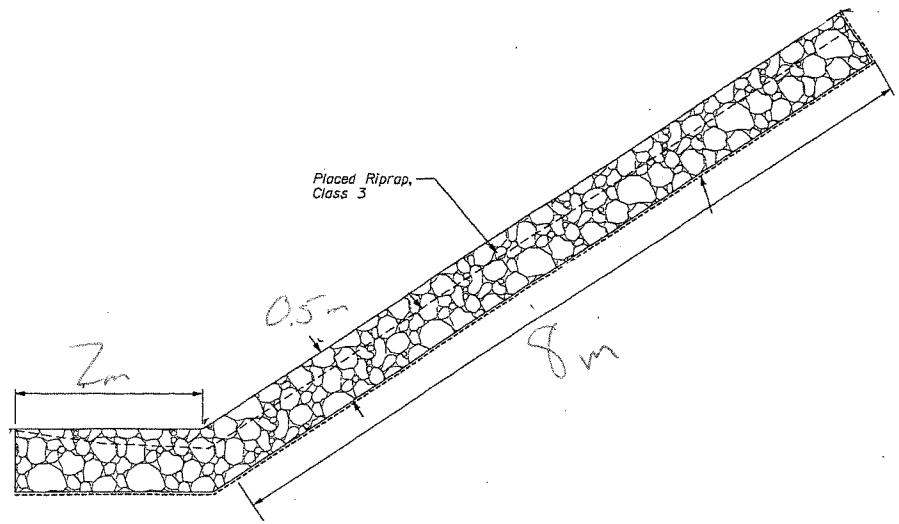

PLACED RIPRAP, CLASS 3

2.5 m wide

RECEIVED
NOV 09 2007
BY PROJECT ENGINEER

PLACED RIPRAP, CLASS 3

L:\work\52988\cad\Design\II-05 Sub\PlanSet\Erosion Detail.dgn 12/10/2005 4:16:48 PM Designed by: Michael Salley 12/2005 Checked by: Stanley Ching 12/2005

STATE	PROJECT
OR	PFH 244-1(1)

Sta 20+140

$\forall = 4.2 m^3$

Station 20+140 @ 24' right of center line

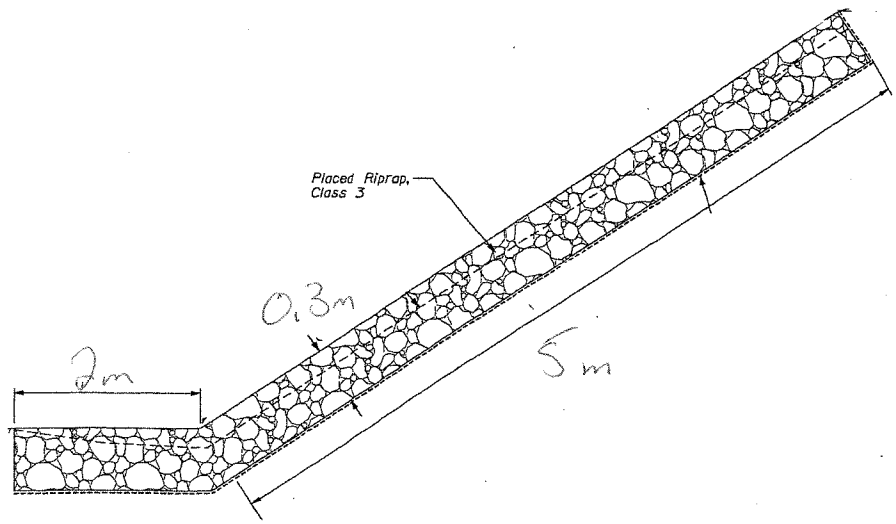

PLACED RIPRAP, CLASS 3

Width 2m

RECEIVED
NOV 09 2007
BY PROJECT ENGINEER

PLACED RIPRAP, CLASS 3

L:\work\52988\cad\Design\M-05 Sub\PlanSet\Trenton Detail.dgn 12/10/2005 4:18:46 PM Designed by: Michael Salley 12/2005 Checked by: Stanley Ching 12/2005