STATE	PROJECT	SHEET NUMBER

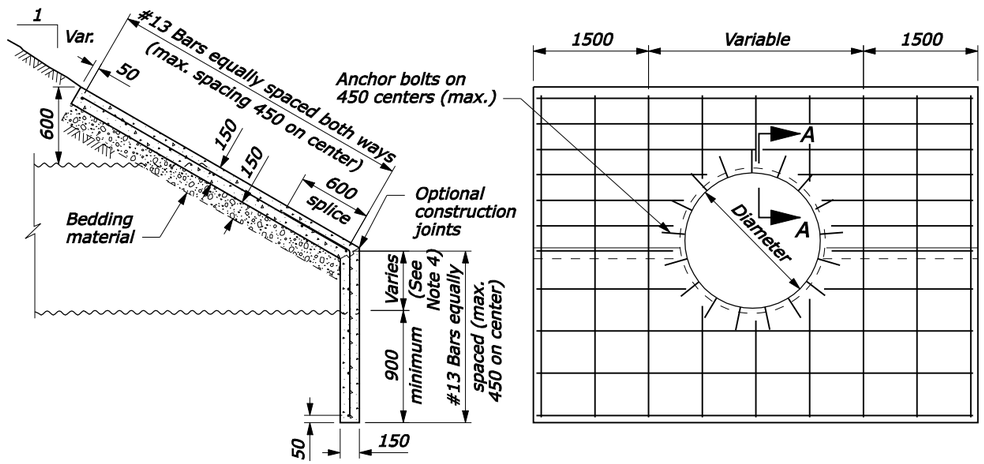

TYPE A STEP BEVEL FOR ROUND PIPE

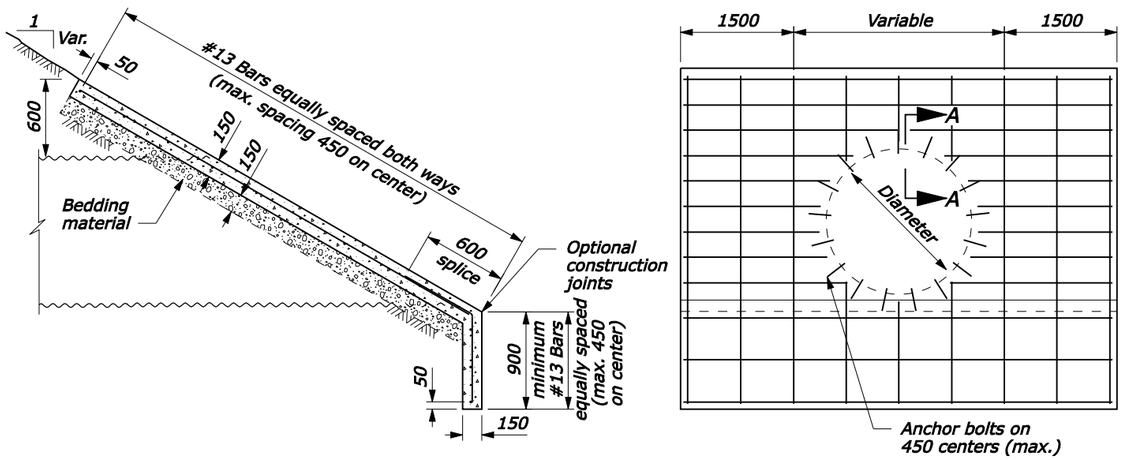

TYPE B FULL BEVEL FOR ROUND PIPE

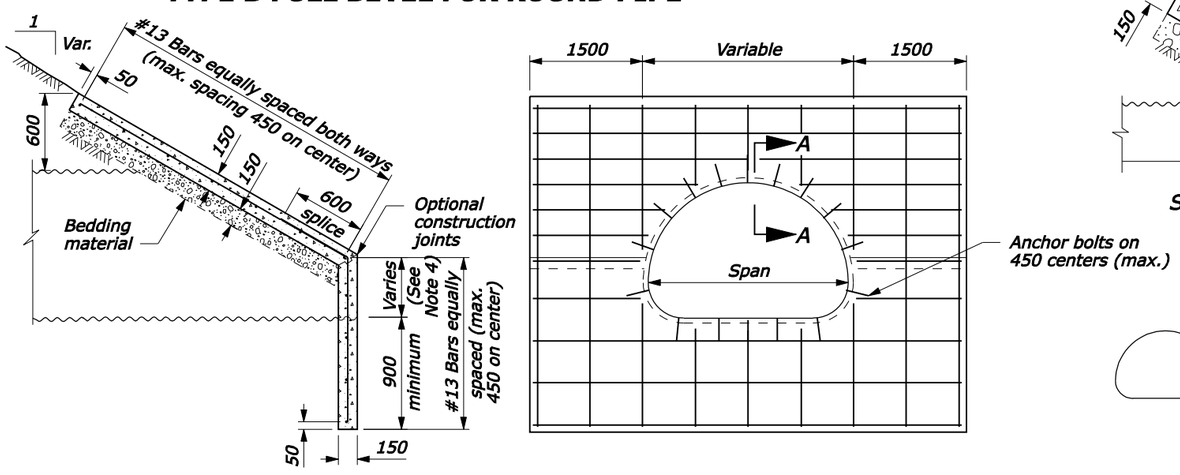

STEP BEVEL FOR PIPE ARCH CULVERT

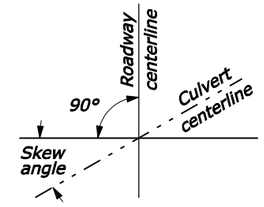

SKEW ANGLE DIAGRAM

REINFORCED CONCRETE HEADWALL

STEP BEVEL PIPE ARCH CULVERT

PIPE ARCH SIZE	CONCRETE (m3)			
	Skew Angle			
Span x rise	0°	15°	30°	45°
1855 x 1400	2.4	2.6	2.8	3.5
2060 x 1500	2.7	2.8	3.1	3.8
2415 x 1700	3.1	3.2	3.3	4.4
2845 x 1905	3.4	3.5	3.9	4.7
3480 x 2210	3.8	4.0	4.4	5.4
3910 x 2540	4.5	4.6	5.1	6.3
4240 x 2615	4.7	4.9	5.4	6.7
4675 x 3150	5.0	5.2	5.8	7.1
4955 x 3300	5.6	5.7	6.3	7.3

REINFORCED CONCRETE HEADWALL

ROUND PIPE CULVERT

PIPE SIZE	CONCRETE (m3)							
	TYPE A STEP BEVEL				TYPE B FULL BEVEL			
	Skew Angle				Skew Angle			
Diameter	0°	15°	30°	45°	0°	15°	30°	45°
1200	2.5	2.5	2.6	2.8	2.2	2.4	2.7	2.7
1500	2.8	2.8	2.9	3.1	2.8	2.8	2.9	3.1
1800	3.1	3.1	3.2	3.4	3.2	3.3	3.4	3.5
2100	3.4	3.5	3.6	3.8	3.7	3.7	3.8	4.1
2400	3.9	4.0	4.1	4.4	4.1	4.1	4.3	4.5
2700	4.3	4.4	4.5	4.8	4.5	4.6	4.7	5.1
3000	4.6	4.7	4.8	5.2	5.0	5.0	5.2	5.6
3300	5.3	5.4	5.6	6.0	5.4	5.5	5.7	6.1
3600	5.7	5.7	6.0	6.5	5.9	6.0	6.2	6.7
3900	6.0	6.1	6.3	7.0	6.4	6.5	6.7	7.3
4200	6.6	6.7	7.0	7.6	6.9	7.0	7.3	8.0
4500	6.8	7.0	7.2	7.8	7.4	7.5	7.8	8.5

NOTE:

1. CONCRETE: Chamfer all exposed edges 20 mm.
2. REINFORCING STEEL: Grade 420 (ASTM A615M or A996M) deformed billet steel bars conforming to AASHTO M 31. The minimum concrete cover to the face of any bar is 50 mm unless otherwise shown.
3. HEADWALL TYPE: Use Type A Step Bevel headwalls for round pipe unless otherwise specified in the special contract requirements.
4. STEP BEVEL: The variable dimension indicated for the height or step conform to manufacturer's recommendations unless otherwise specified in the special contract requirements.
5. CUTOFF WALLS: The minimum depth shown may be reduced in solid rock, provided wall is keyed into the rock at least 300 mm.
6. ANCHOR BOLTS: Conform to ASTM A307-04. Galvanize in accordance with ASTM A153M.
7. BEDDING: Construct a firm and uniform foundation before placing the bedding. Use clean 10 mm sandy material for bedding unless otherwise specified in the special contract requirements.
8. ESTIMATED QUANTITIES: The concrete quantities are based on a 900 mm cut-off wall and 1:1.5 fill slopes for each of the skew angles. Interpolate concrete quantities for headwalls not shown. Reinforcing steel is estimated at 32 kg/m3 of concrete excluding the weight of the anchor bolts.
9. Furnish hardware in the metric sizes shown. Equivalent US Customary sizes may be used when metric sizes are not available.
10. Dimensions without units are millimeters.

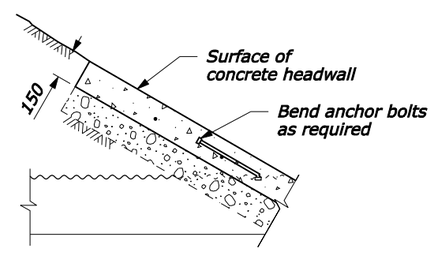

SECTION A-A

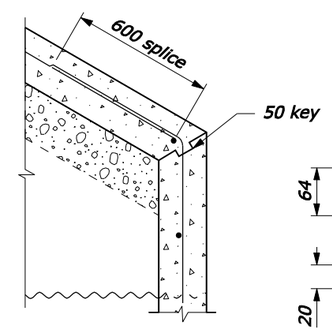

CONSTRUCTION JOINT DETAIL

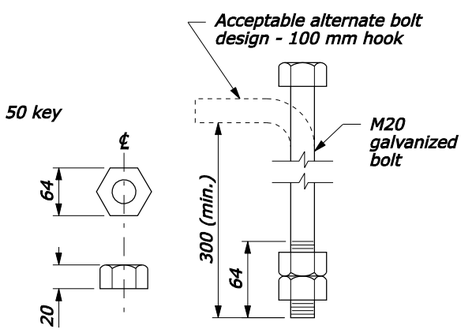

ANCHOR BOLT DETAIL

PIPE-ARCHES ROUND PIPES

MULTIPLE PIPE INSTALLATION

NO SCALE

U.S. DEPARTMENT OF TRANSPORTATION
FEDERAL HIGHWAY ADMINISTRATION
WESTERN FEDERAL LANDS HIGHWAY DIVISION

METRIC DETAIL

REINFORCED CONCRETE HEADWALL

DETAIL APPROVED FOR USE 3/1996

REVISED: 5/1997 3/2000 2/2005

DETAIL WM601-50

21-Sep-2005 04:16 PM

F:\StanDraw\Western\w60150.dgn [Metric]