STATE	PROJECT	SHEET NUMBER

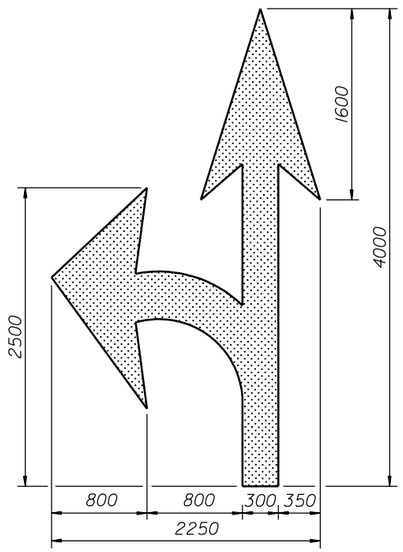

TURN AND THROUGH LANE-USE ARROW

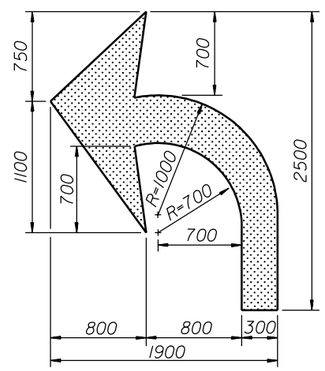

TURN LANE-USE ARROW

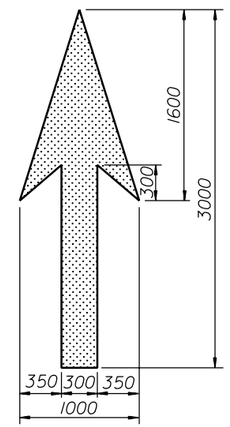

THROUGH LANE-USE ARROW

NOTE:

1. Dimensions not labeled are in millimeters.
2. Place pavement word and symbol markings in accordance with the "Manual on Uniform Traffic Control Devices" (MUTCD), current edition.
3. All letters, numerals and symbols shall conform with the "Standard Alphabets for Highway Signs and Pavement Markings".

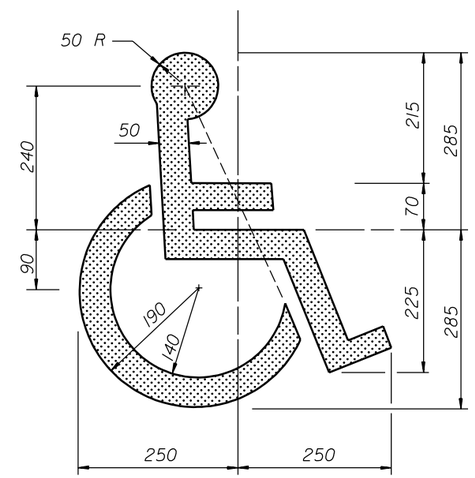

HANDICAP MARKING

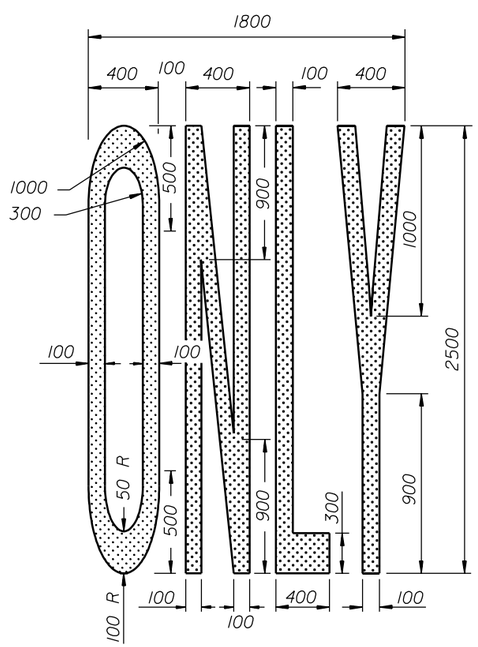

"ONLY" WORD MARKING

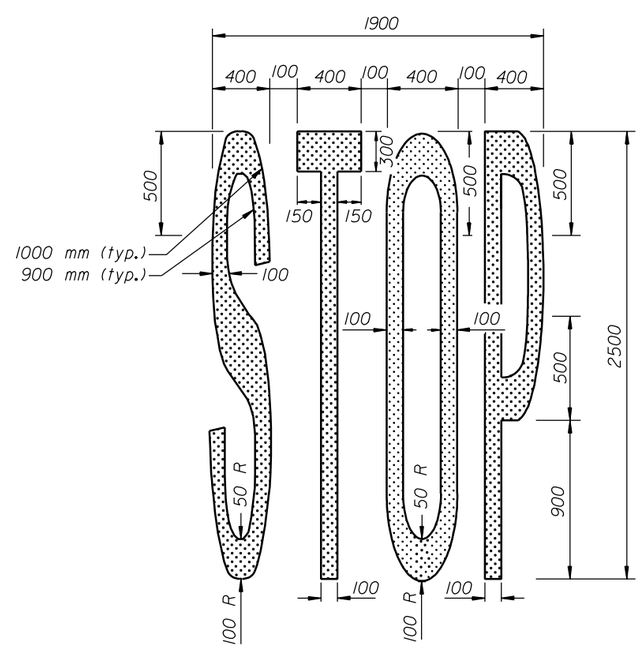

"STOP" WORD MARKING

PAYMENT QUANTITIES	
ITEM	AREA m2
Turn Lane-Use Arrow	1.5
Through Lane-Use Arrow	1.2
Turn and Through Lane-Use Arrow	2.5
Handicap Marking	2.8
ONLY Word Marking	2.0
STOP Word Marking	1.9

NO SCALE

U.S. DEPARTMENT OF TRANSPORTATION
FEDERAL HIGHWAY ADMINISTRATION
WESTERN FEDERAL LANDS HIGHWAY DIVISION

METRIC DETAIL

PAVEMENT MARKINGS SYMBOLS AND WORDS

DETAIL APPROVED FOR USE 3/1996

REVISED:

DETAIL WM634-1

f:\standraw\metric\details\wm6340i.dgn 13 DEC 2000