REG	STATE	PROJECT	SHEET NO.	TOTAL SHEETS

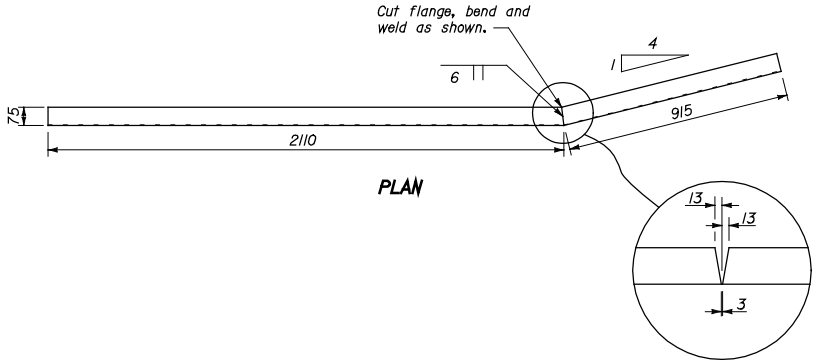

PLAN

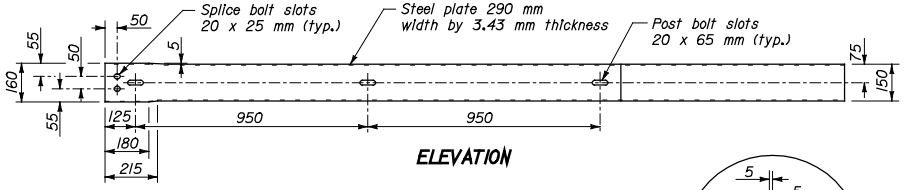

ELEVATION

BENT PLATE RUBRAIL

NOTE:

1. Dimensions not labeled are in millimeters.
2. Attach rubrail end flush with sloped toe of safety shape. Shop fabricate the C150 x 12.2 rubrail end to be consistent with the slope of safety shape. Both clockwise and counterclockwise fabrications may be required.
3. Dimensional tolerances not shown or implied are intended to be those consistent with the proper functioning of the part, including its appearance, and accepted manufacturing practices.

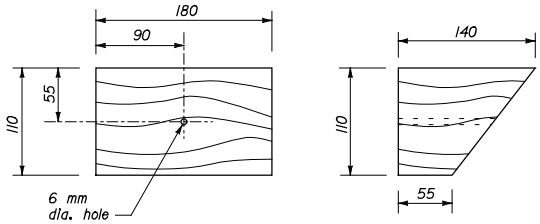

FRONT SIDE

WOOD BLOCKOUT FOR RUBRAIL ON CONCRETE SAFETY SHAPE

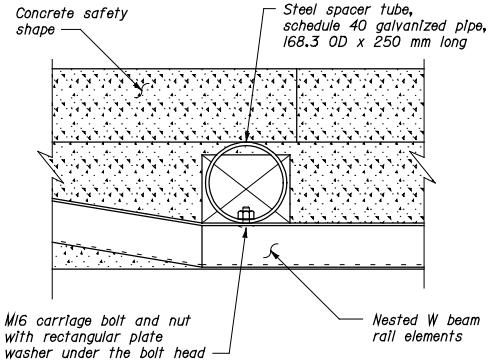

STEEL SPACER BLOCK

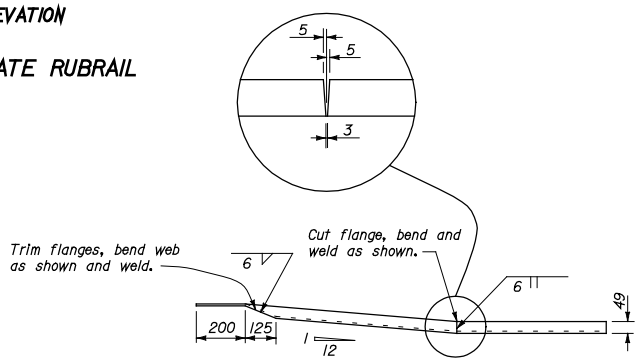

PLAN

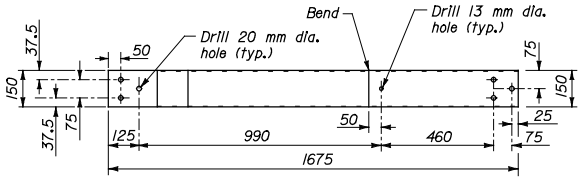

ELEVATION

C150 X 12.2 RUBRAIL

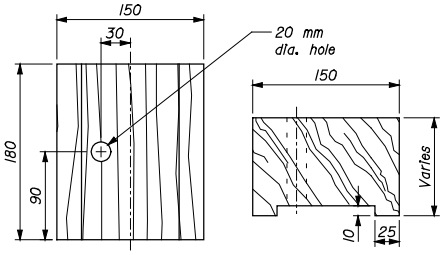

FRONT TOP

WOOD BLOCKOUT FOR RUBRAIL ON STEEL POSTS

NO SCALE

U.S. DEPARTMENT OF TRANSPORTATION
FEDERAL HIGHWAY ADMINISTRATION
FEDERAL LANDS HIGHWAY OFFICE

METRIC STANDARD

G4 W BEAM GUARDRAIL CONNECTION TO STRUCTURE SAFETY SHAPE FACE RUBRAIL

STANDARD APPROVED FOR USE 03/96

REVISED: 1/98

STANDARD M617-29

MST617-29.DGN

$$$$$DGNSPEC$$$$$ $$$$$SYTIME$$$$$