REG	STATE	PROJECT	SHEET No.	TOTAL SHEETS

NOTE:

1. Dimensions not labeled are in millimeters.

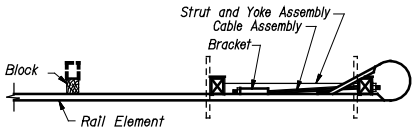

PLAN

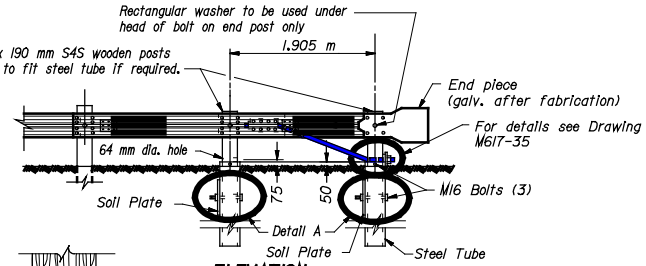

ELEVATION

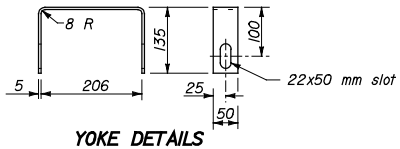

YOKE DETAILS

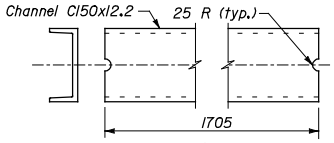

STRUT DETAILS

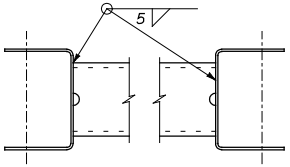

Shown, legs down,
For opposite hand, install legs up.

STRUT AND YOKE ASSEMBLY

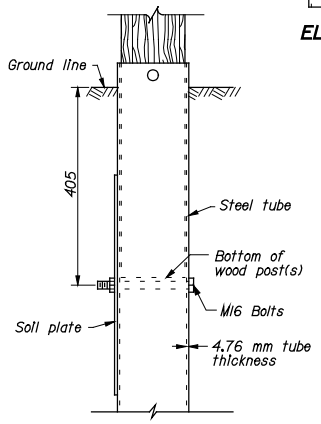

DETAIL A

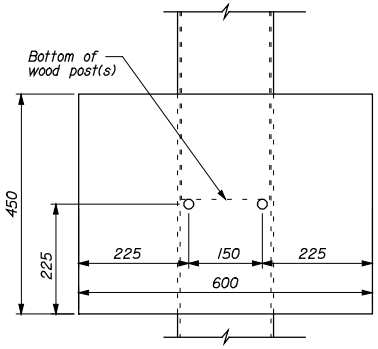

SOIL PLATE

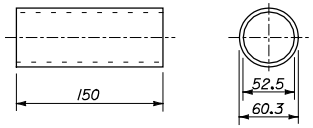

GALVANIZED STANDARD PIPE POST SLEEVE

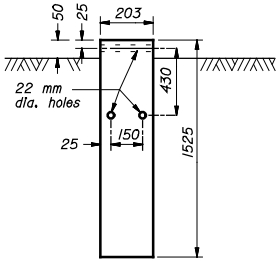

TS 203x152x4.8 mm STEEL TUBE

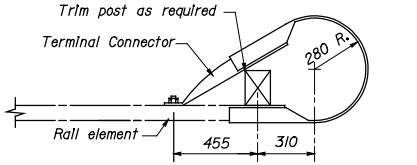

PLAN

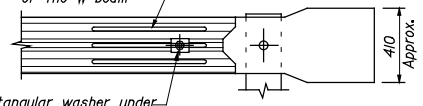

ELEVATION

END PIECE

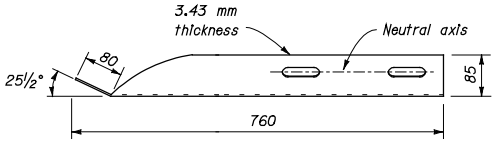

PLAN

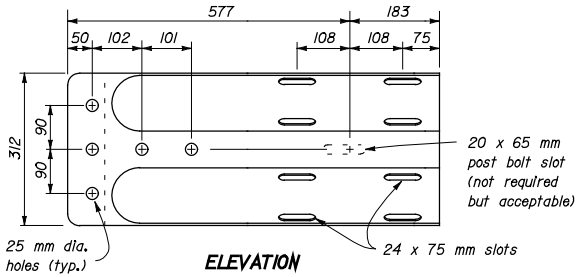

ELEVATION

TERMINAL CONNECTOR

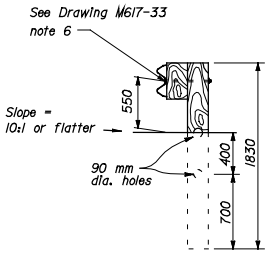

WOODEN CONTROLLED RELEASING TERMINAL (CRT) POSTS

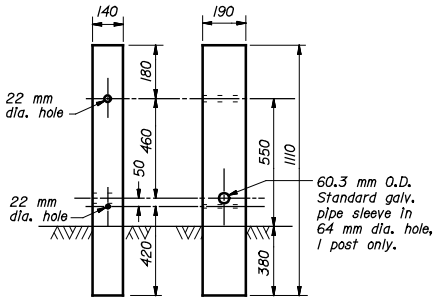

WOOD BREAKAWAY POST

NO SCALE

U.S. DEPARTMENT OF TRANSPORTATION
FEDERAL HIGHWAY ADMINISTRATION
FEDERAL LANDS HIGHWAY DIVISION

METRIC STANDARD

G4 W BEAM GUARDRAIL SLOTTED RAIL TERMINAL SRT-350 ANCHORAGE ASSEMBLY

DETAIL APPROVED FOR USE 11/97

REVISED: 4/98

STANDARD M617-34

$$$$$DGNSPEC$$$$$ $$$$$SYTIME$$$$$$