REG	STATE	PROJECT	SHEET NO.	TOTAL SHEETS

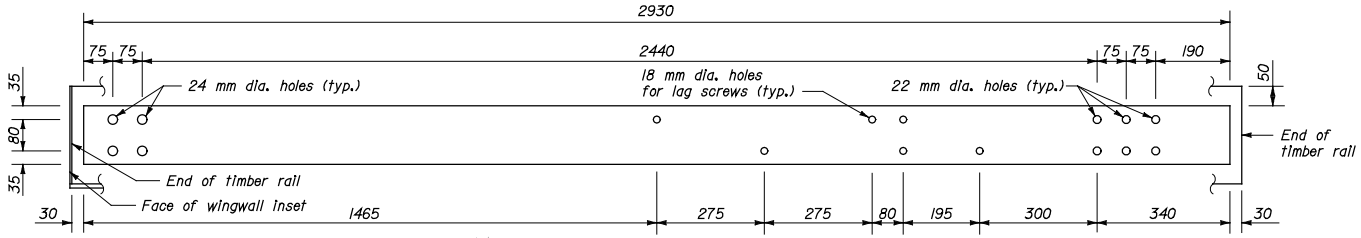

TERMINAL SECTION 150 x 10 x 2930 mm

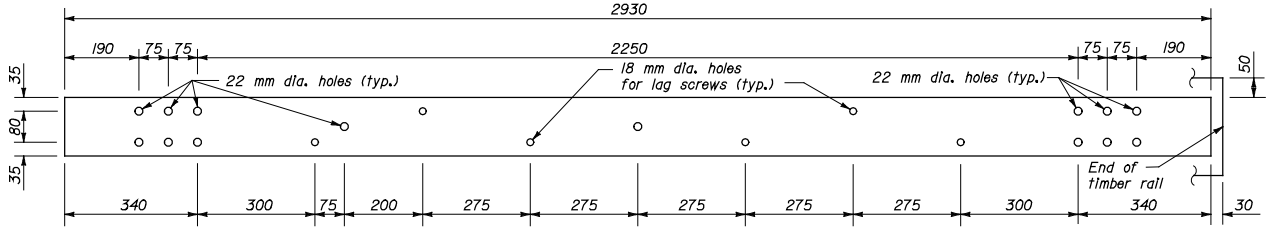

TRANSITION SECTION 150 x 10 x 2930 mm

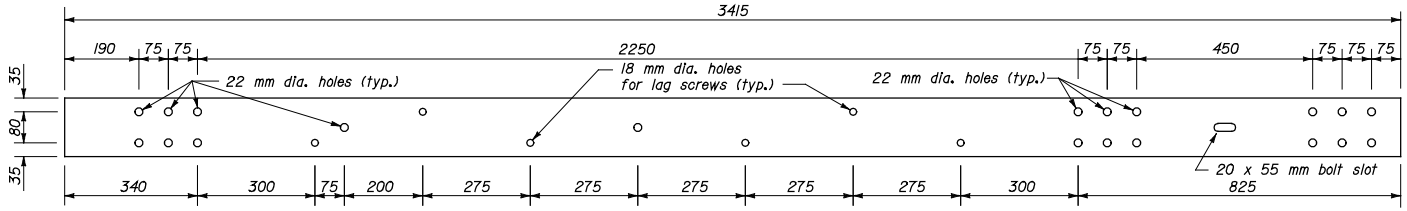

TRANSITION SECTION 150 x 10 x 3415 mm

NOTE:

1. Dimensions not labeled are in millimeters.
2. Pre-drill 18 mm holes in blocks outs and posts.
3. Furnish hardware in the metric sizes shown. Equivalent imperial sizes may be used when metric sizes are not available.

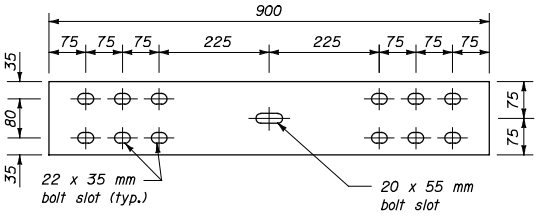

STEEL SPLICE PLATE
150 x 10 x 900 mm

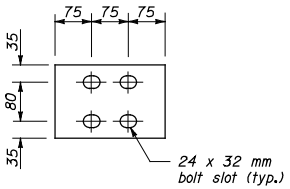

STEEL BEARING PLATE
150 x 10 x 225 mm

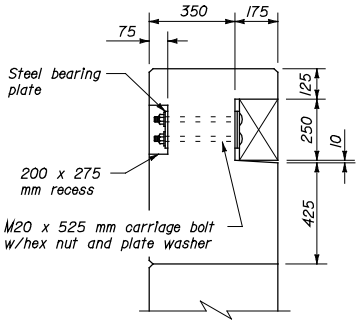

SECTION A-A

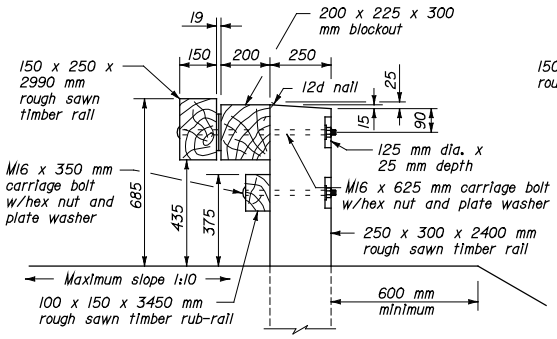

SECTION B-B

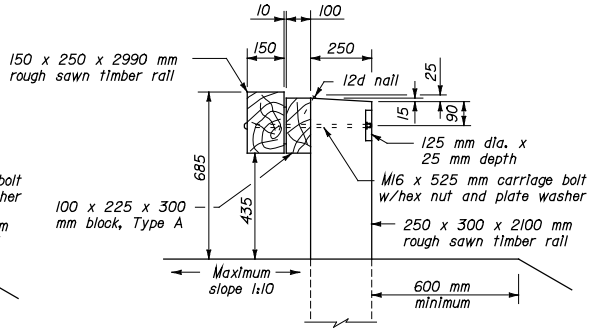

SECTION C-C

NO SCALE

U.S. DEPARTMENT OF TRANSPORTATION
FEDERAL HIGHWAY ADMINISTRATION
FEDERAL LANDS HIGHWAY OFFICE

METRIC STANDARD

STEEL-BACKED TIMBER GUARDRAIL BRIDGE CONNECTION

STANDARD APPROVED FOR USE 03/96

REVISED:

STANDARD M617-66

MST6T66.DGN

$$$$$DGNSPEC$$$$$ $$$$$SYTIME$$$$$