REG	STATE	PROJECT	SHEET NO.	TOTAL SHEETS

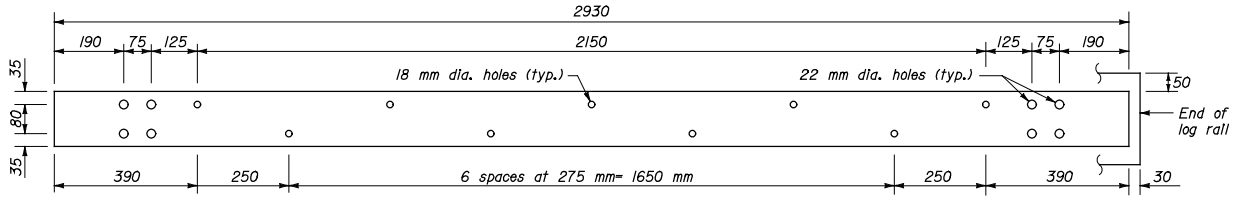

STEEL RAIL
150 x 10 x 2930 mm

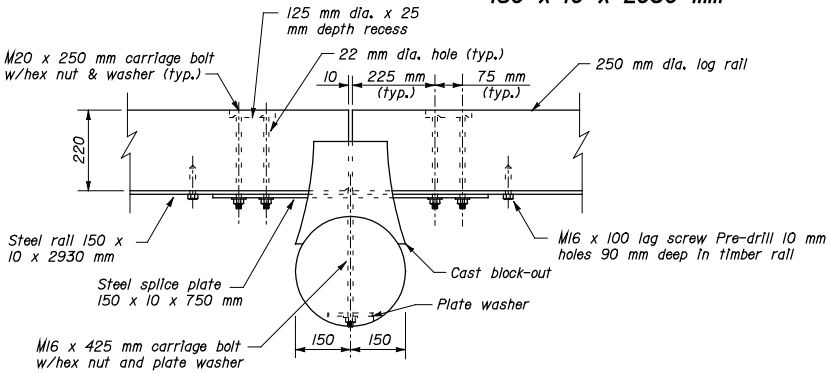

PLAN

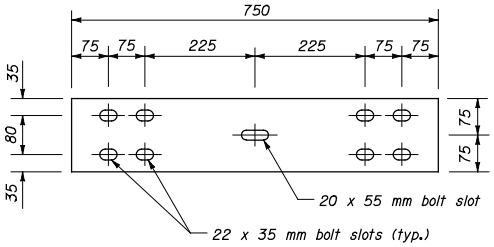

STEEL SPLICE PLATE
150 X 10 X 750 mm

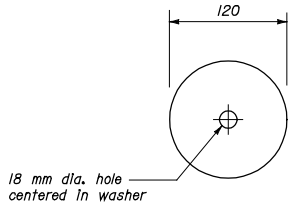

PLATE WASHER
120 mm Dia. 6 mm

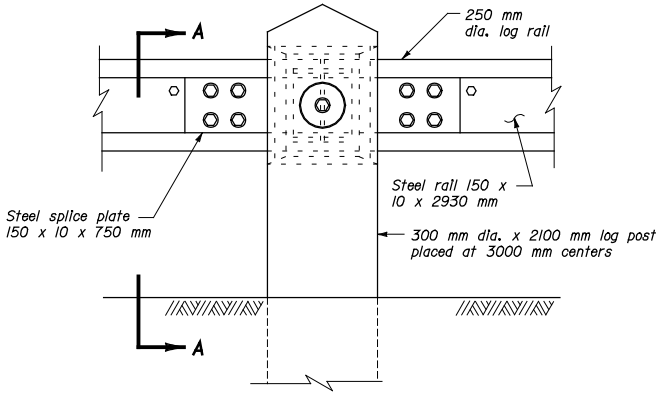

ELEVATION

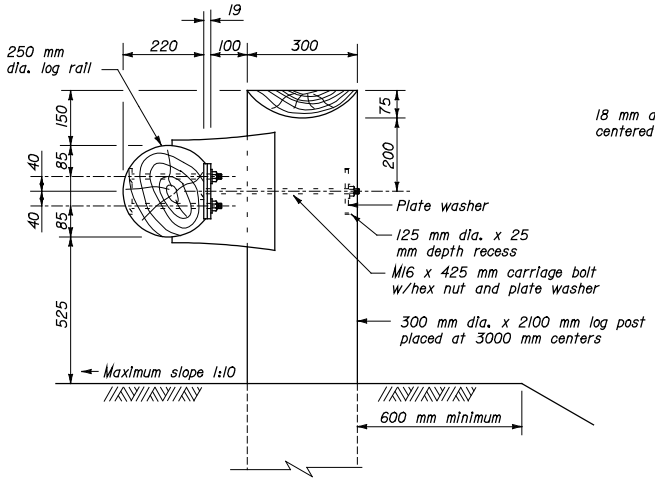

SECTION A-A

POST CONNECTION

NO SCALE

NOTE:

1. Dimensions not labeled are in millimeters.
2. For details of the cast block-out and general notes for Steel-Backed Log Guardrail See Standard M617-81.
3. Furnish hardware in the metric sizes shown. Equivalent imperial sizes may be used when metric sizes are not available.

U.S. DEPARTMENT OF TRANSPORTATION
FEDERAL HIGHWAY ADMINISTRATION
FEDERAL LANDS HIGHWAY OFFICE

METRIC STANDARD

STEEL-BACKED LOG RAIL

STANDARD APPROVED FOR USE 03/96

REVISED:

STANDARD
M617-80

MST6178O.DGN

$$$$$DGNSPEC$$$$$ $$$$$SYTIME$$$$$