REG	STATE	PROJECT	SHEET NO.	TOTAL SHEETS

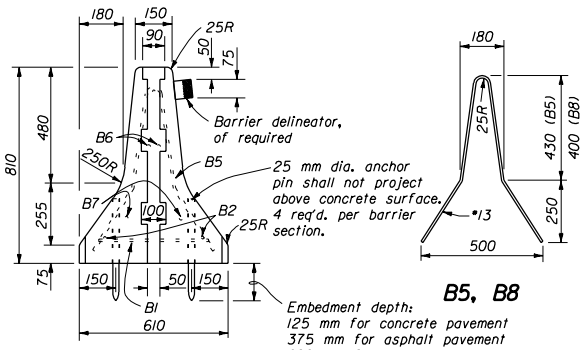

VIEW A-A

B5, B8

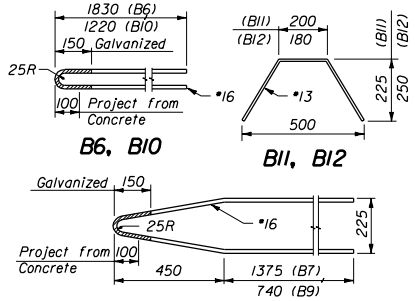

B6, B10

B11, B12

B7, B9

REINFORCING STEEL DETAILS

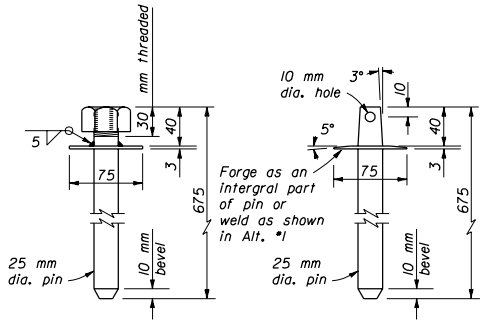

ALTERNATE 1

ALTERNATE 2

CONNECTING PINS

NOTE:

1. Dimensions not labeled are in millimeters.
2. Provide for a clear cover of 50 mm for all reinforcing steel except as noted.
3. Galvanized anchor pin, connecting pin and area shown on reinforcement bars B6, B7, B9, and B10 in accordance with AASHTO M232 after fabrication.
4. Embedded inserts may be used for lifting and handling. Submit details for the inserts for approval.

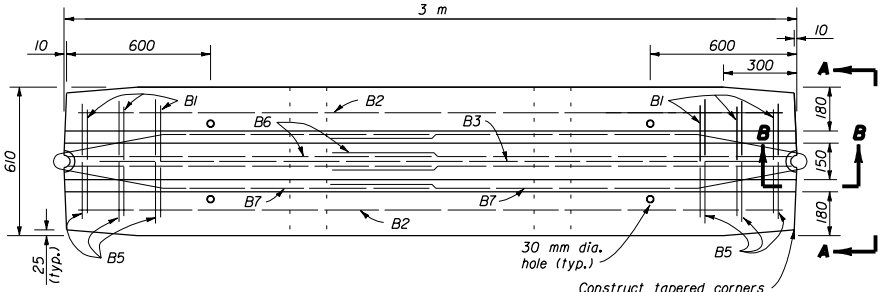

PLAN

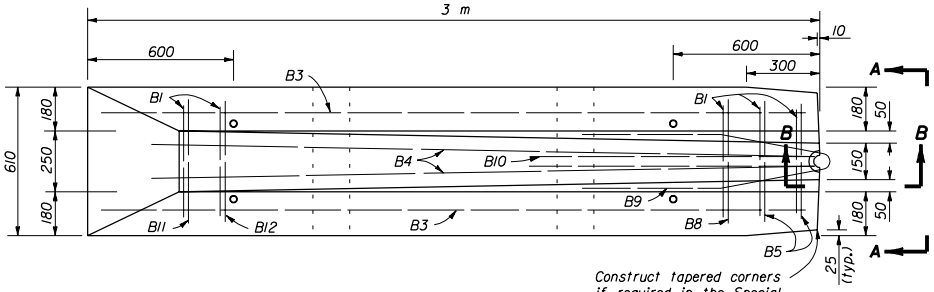

PLAN

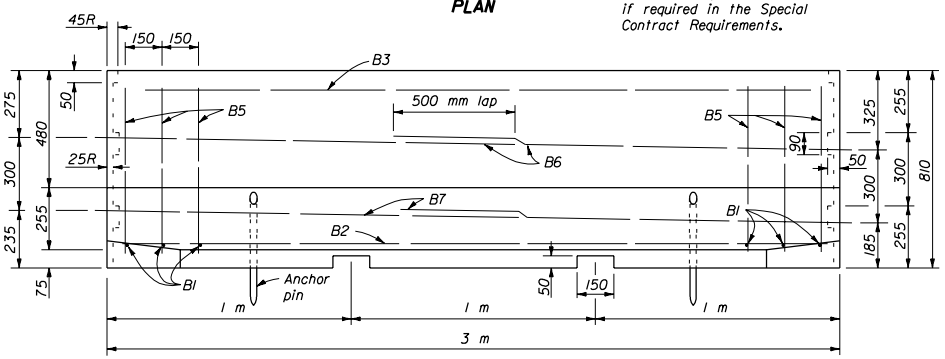

ELEVATION
BARRIER SECTION

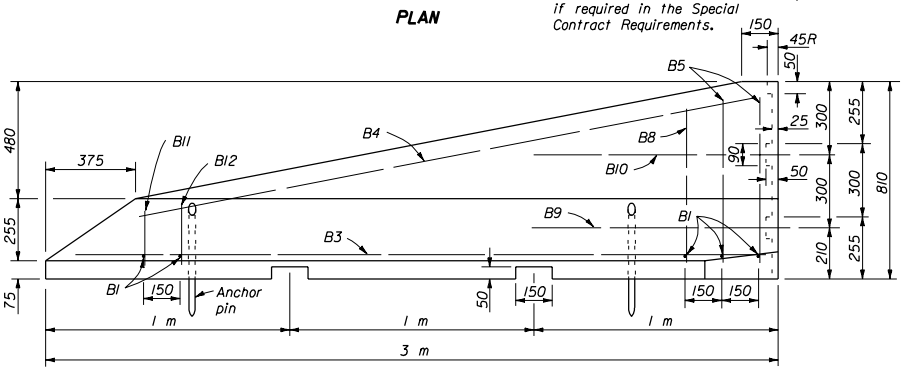

ELEVATION
TERMINAL SECTION

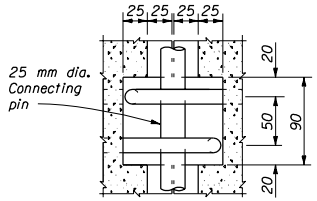

SECTION B-B

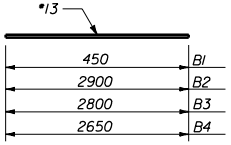

B1, B2, B3, B4

NO SCALE

U.S. DEPARTMENT OF TRANSPORTATION
FEDERAL HIGHWAY ADMINISTRATION
FEDERAL LANDS HIGHWAY OFFICE

METRIC STANDARD

CONCRETE BARRIER

STANDARD APPROVED FOR USE 03/96

REVISED: 12/98

STANDARD M618-1

MST618DLDGN

$$$$$DGNSPEC$$$$$

$$$$$SYTIME$$$$$